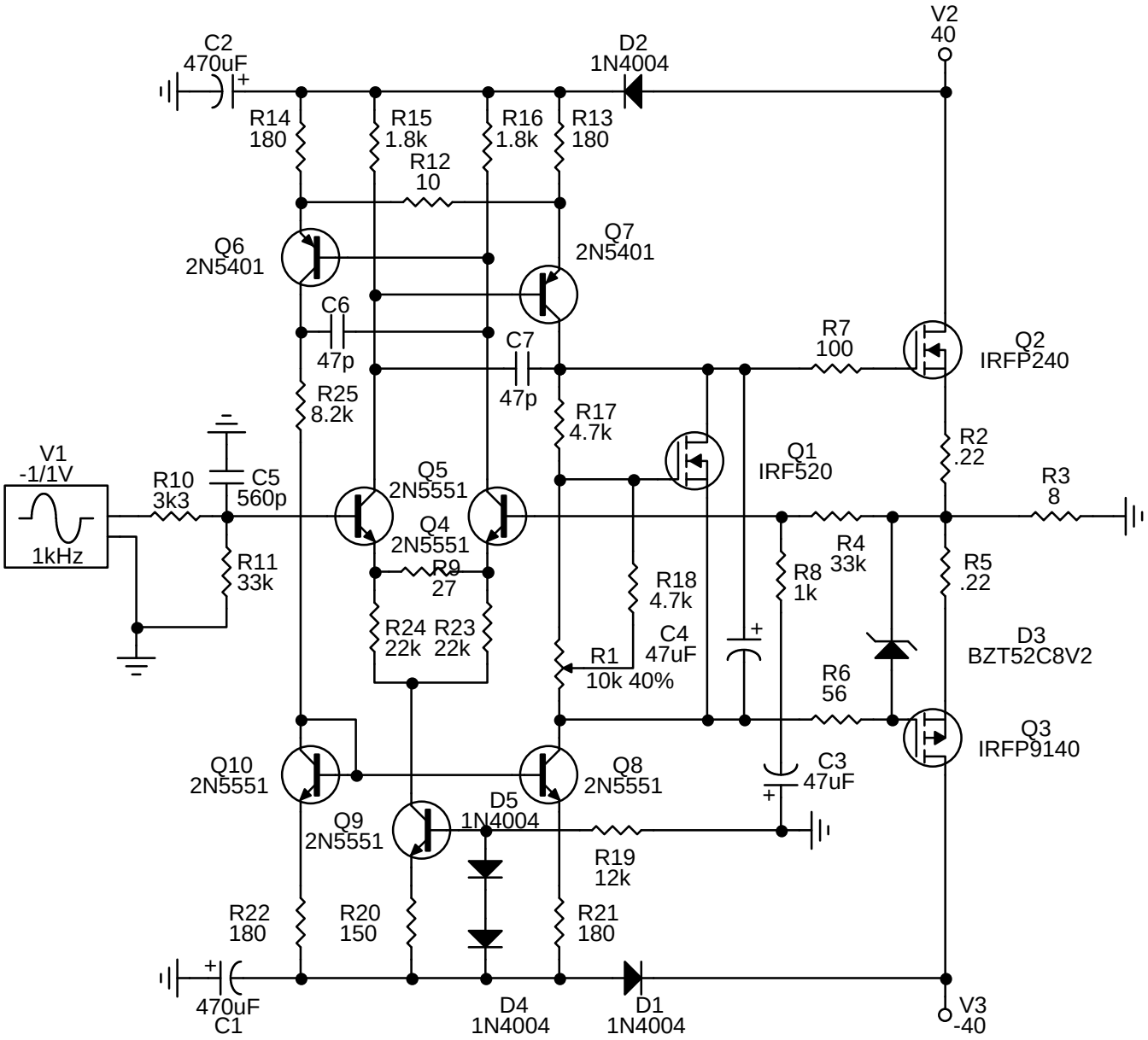

John Adamson	
2 Channel Audio Amp	
Rev 12-7-94	ID Not for Simulation
Date: 9-18-93	Page: 1 of 1