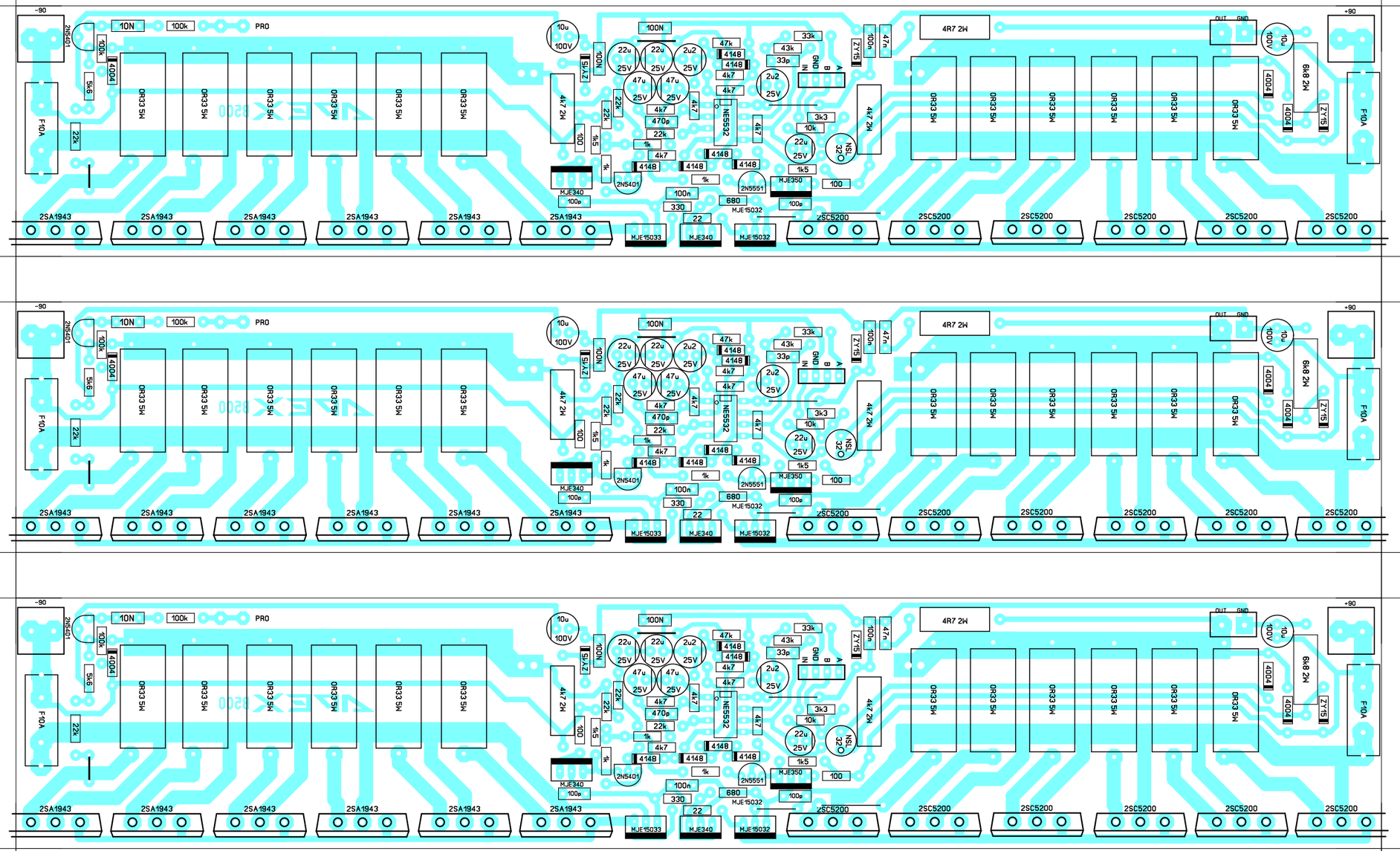
-90
+90
2N5401
10N
100k
PR0
100k
4004
5k6
F10A
22k
OR33 5W
10u
100V
100N
5A/2Z
4k7 2W
100
1k5
1k
2N5401
MJE340
100p
22u
25V
2u2
47u
22k
4k7
470p
1k
4148
NE5532
47k
33k
43k
33p
GND
IN
B
A
2u2
3k3
10k
NSL
32O
1k5
MJE350
100
2N5551
680
MJE15032
100n
330
22
MJE15033
MJE340
MJE15032
2SA1943
2SC5200
4R7 2W
47n
Z7/15
6k8 2W
OUT
GND

-90
+90
2N5401
10N
100k
PR0
100k
4004
5k6
F10A
22k
OR33 5W
10u
100V
100N
5A/2Z
4k7 2W
100
1k5
1k
2N5401
MJE340
100p
22u
25V
2u2
47u
22k
4k7
470p
1k
4148
NE5532
47k
33k
43k
33p
GND
IN
B
A
2u2
3k3
10k
NSL
32O
1k5
MJE350
100
2N5551
680
MJE15032
100n
330
22
MJE15033
MJE340
MJE15032
2SA1943
2SC5200
4R7 2W
47n
Z7/15
6k8 2W
OUT
GND

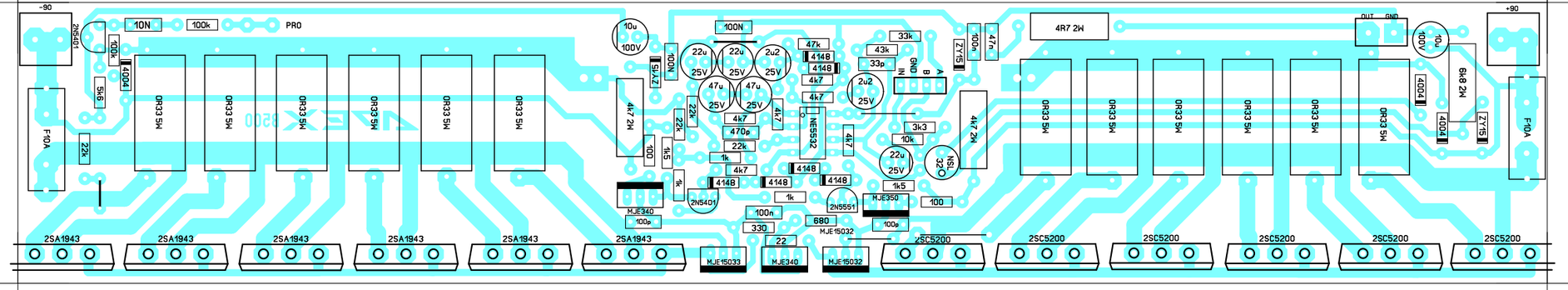
-90
+90
2N5401
10N
100k
PR0
100k
4004
5k6
F10A
22k
OR33 5W
10u
100V
100N
5A/2Z
4k7 2W
100
1k5
1k
2N5401
MJE340
100p
22u
25V
2u2
47u
22k
4k7
470p
1k
4148
NE5532
47k
33k
43k
33p
GND
IN
B
A
2u2
3k3
10k
NSL
32O
1k5
MJE350
100
2N5551
680
MJE15032
100n
330
22
MJE15033
MJE340
MJE15032
2SA1943
2SC5200
4R7 2W
47n
Z7/15
6k8 2W
OUT
GND