REVISION RECORD			
LTR	ECO NO:	APPROVED:	DATE:

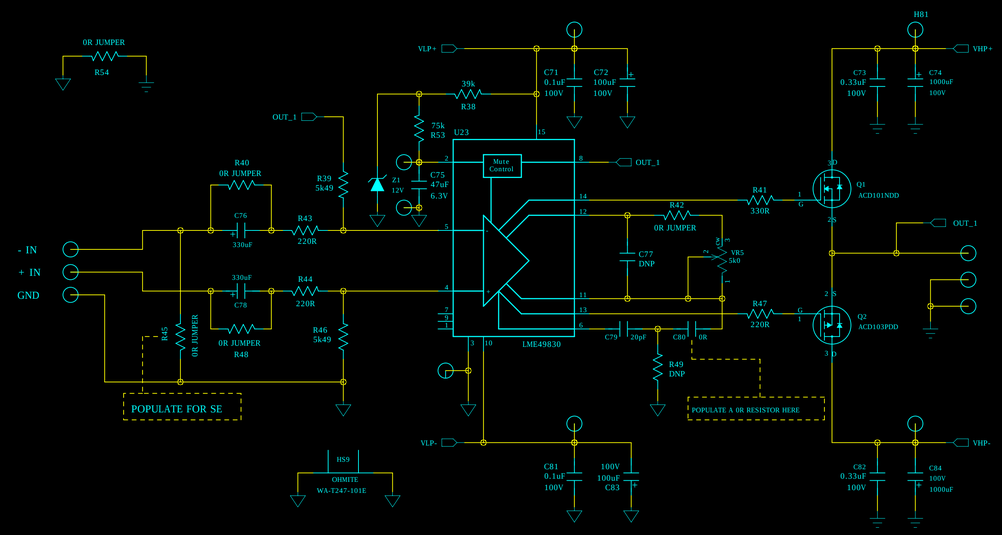

DRAWN: opc	DATED: 9/13/2011	COMPANY:	
CHECKED:	DATED:	TITLE: LME49830 Power Amplifier	
QUALITY CONTROL:	DATED:	CODE:	SIZE: D / DRAWING NO: 01-04 / REV: A
RELEASED:	DATED:	SCALE:	SHEET: 5 OF 6