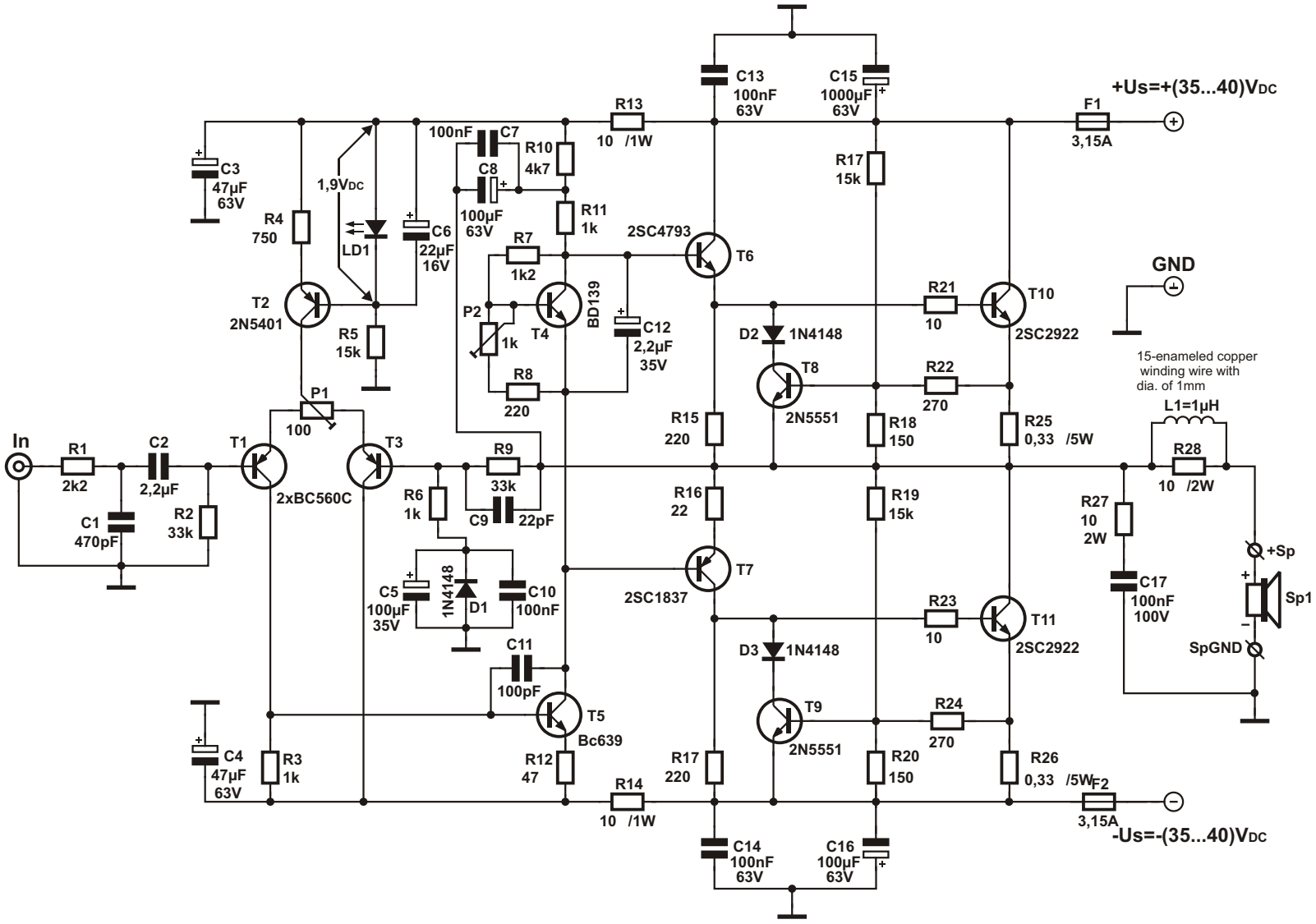
+Us=+(35...40)VDC
-Us=-(35...40)VDC
GND
In
R1 2k2
C2 2,2µF
C1 470pF
R2 33k
T1 2xBC560C
T2 2N5401
T3
P1 100
R3 1k
C4 47µF 63V
C3 47µF 63V
R4 750
R5 15k
1,9VDC
LD1
C6 22µF 16V
100nF C7
C8 100µF 63V
R10 4k7
R11 1k
R7 1k2
P2 1k
R8 220
T4 BD139
C12 2,2µF 35V
R9 33k
C9 22pF
R6 1k
C5 100µF 35V
1N4148 D1
C10 100nF
C11 100pF
T5 Bc639
R12 47
R13 10 /1W
R14 10 /1W
C13 100nF 63V
C15 1000µF 63V
2SC4793 T6
R15 220
R16 22
T7 2SC1837
R17 220
C14 100nF 63V
C16 100µF 63V
R17 15k
D2 1N4148
T8 2N5551
D3 1N4148
T9 2N5551
R18 150
R19 15k
R20 150
R21 10
R22 270
R23 10
R24 270
T10 2SC2922
T11 2SC2922
R25 0,33 /5W
R26 0,33 /5W
F1 3,15A
F2 3,15A
15-enameled copper winding wire with dia. of 1mm
L1=1µH
R28 10 /2W
R27 10 2W
C17 100nF 100V
+Sp
Sp1
SpGND

Figure1.