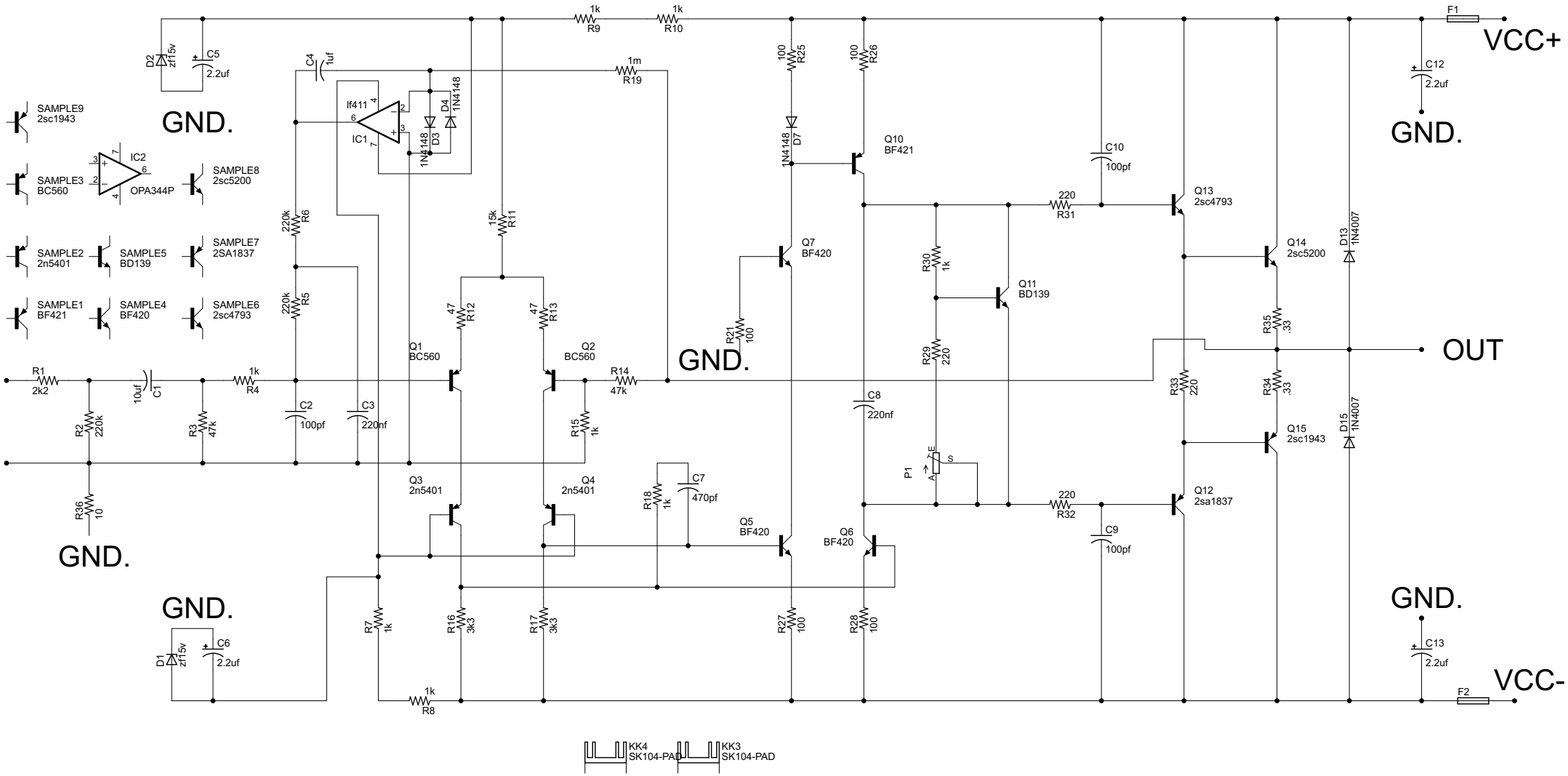

8/6/2011 12:37:56 PM f=0.74 J:\studio reference amp latest\studio reference.sch (Sheet: 1/1)