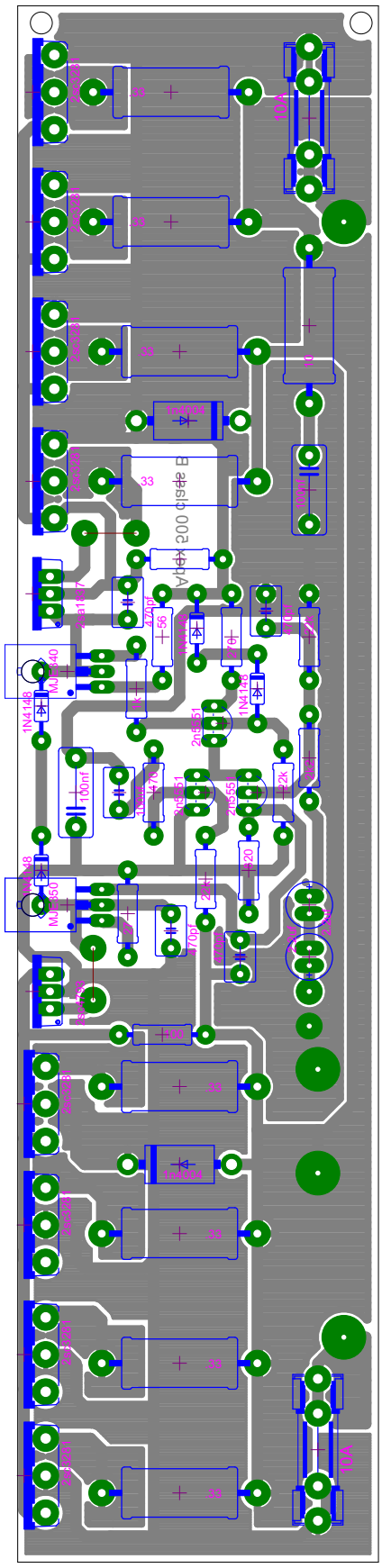


1/10/2001 5:41:47 AM J:\550w class b\550w amp.brd