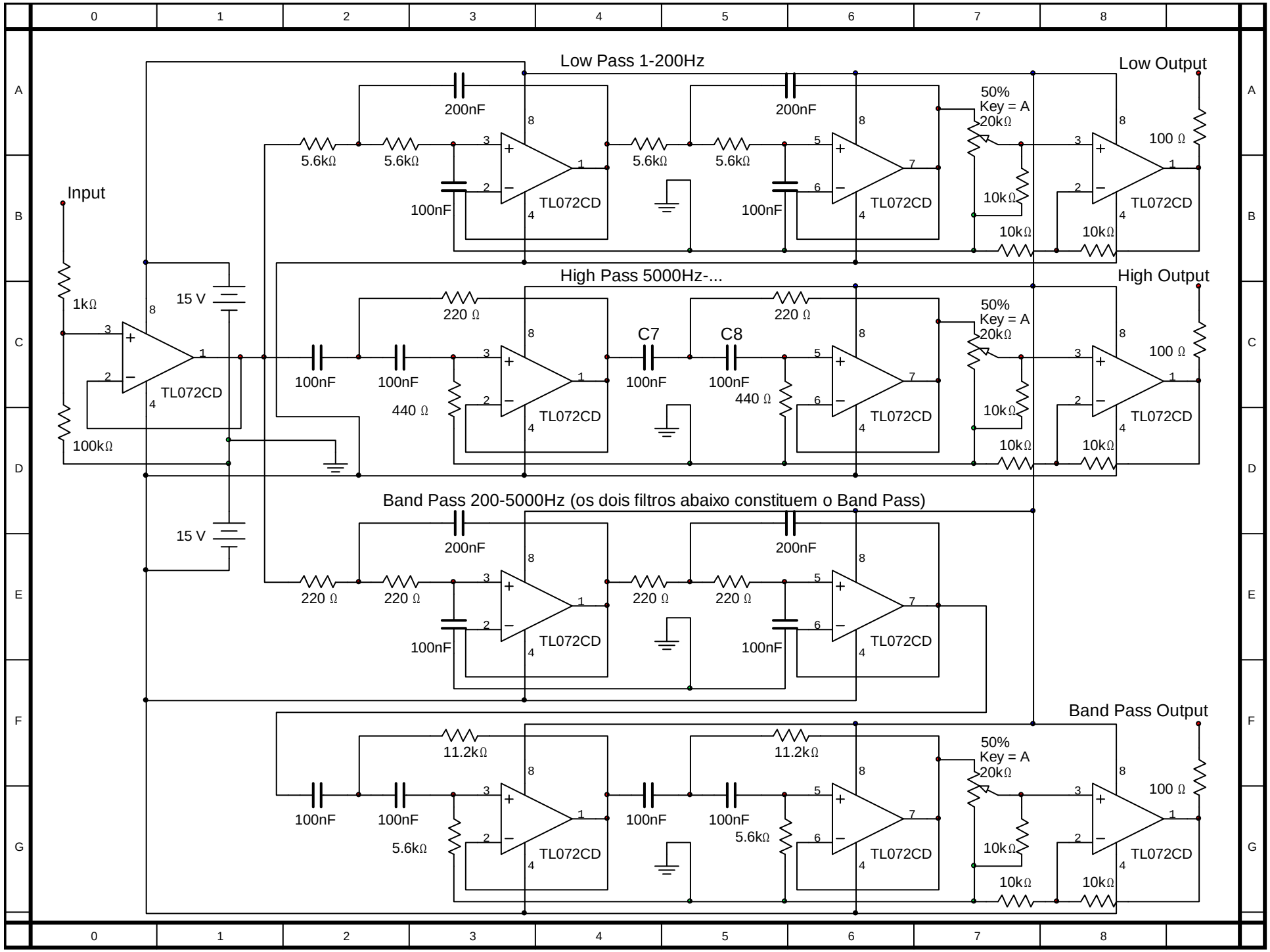
Low Pass 1-200Hz
Low Output
High Pass 5000Hz-...
High Output
Band Pass 200-5000Hz (os dois filtros abaixo constituem o Band Pass)
Band Pass Output
Input
1kΩ
100kΩ
15 V
15 V
TL072CD
200nF
5.6kΩ
100nF
220 Ω
440 Ω
C7
C8
11.2kΩ
50%
Key = A
20kΩ
10kΩ
100 Ω