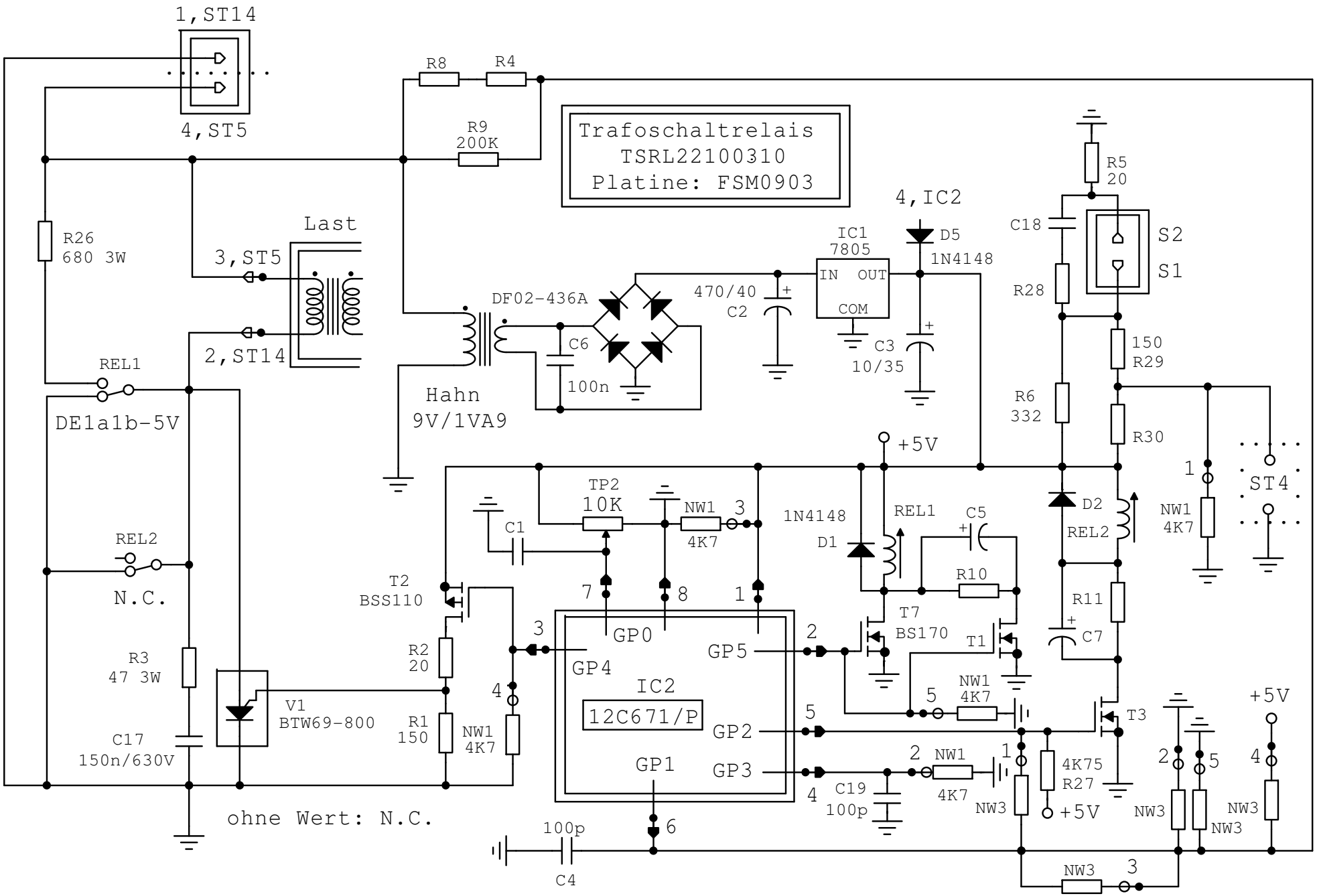
1,ST14
4,ST5
R8
R4
R9
200K
Trafoschaltrelais
TSRL22100310
Platine: FSM0903
R26
680 3W
Last
3,ST5
2,ST14
DF02-436A
C6
100n
Hahn
9V/1VA9
470/40
C2
IC1
7805
IN
OUT
COM
C3
10/35
4,IC2
D5
1N4148
R5
20
C18
S2
S1
R28
150
R29
R6
332
R30
REL1
DE1a1b-5V
+5V
TP2
10K
NW1
4K7
C1
1N4148
D1
REL1
C5
D2
REL2
NW1
4K7
ST4
REL2
N.C.
T2
BSS110
R10
T7
BS170
T1
R11
C7
R2
20
GP0
GP4
GP5
IC2
12C671/P
GP2
GP1
GP3
NW1
4K7
T3
R3
47 3W
V1
BTW69-800
R1
150
NW1
4K7
C17
150n/630V
C19
100p
NW1
4K7
4K75
R27
+5V
NW3
NW3
NW3
NW3
+5V
ohne Wert: N.C.
100p
C4
NW3

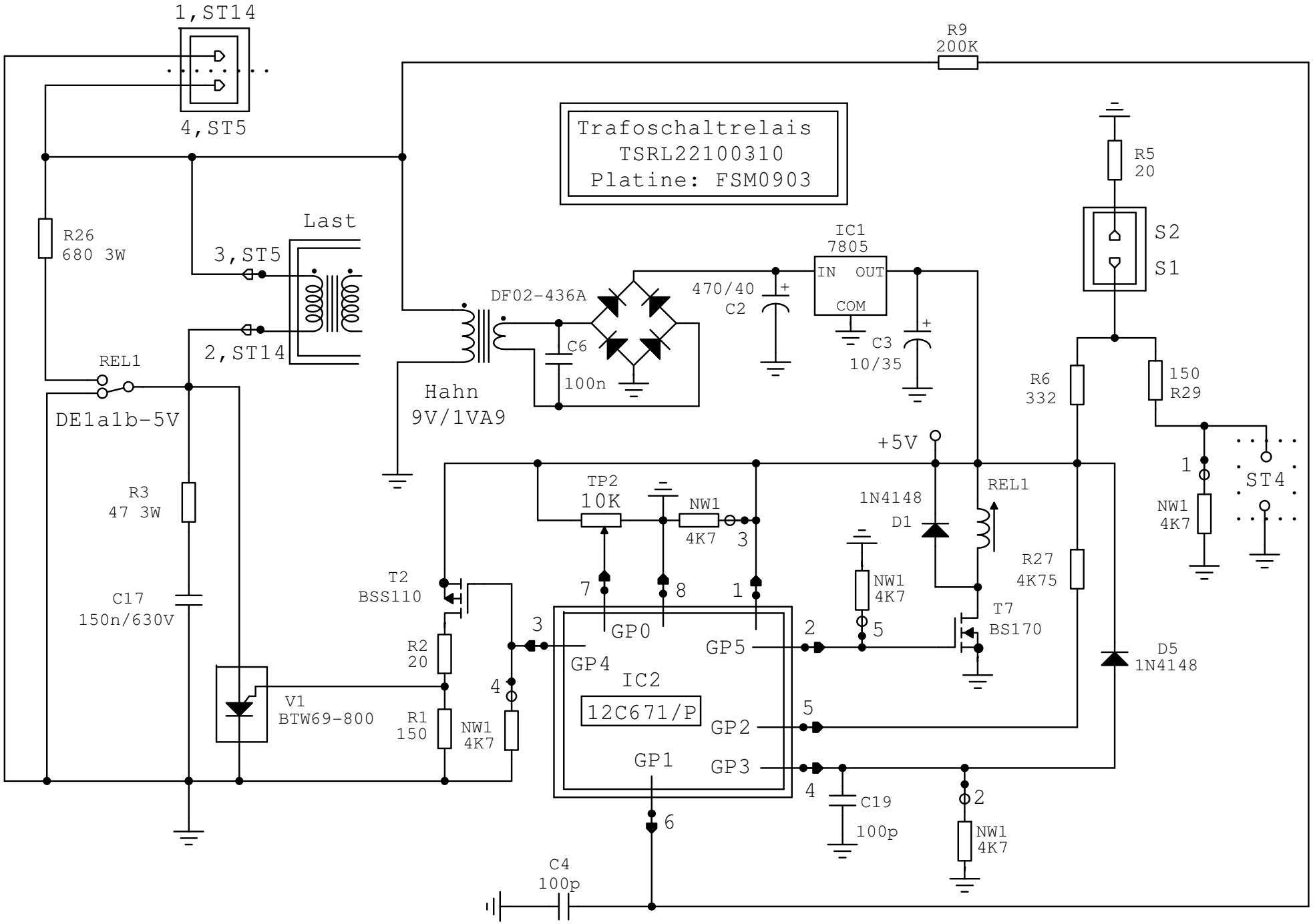
1,ST14
4,ST5
R9
200K
Trafoschaltrelais
TSRL22100310
Platine: FSM0903
R5
20
S2
S1
R26
680 3W
Last
3,ST5
2,ST14
IC1
7805
IN
OUT
COM
470/40
C2
C3
10/35
DF02-436A
C6
100n
Hahn
9V/1VA9
REL1
DE1a1b-5V
R6
332
150
R29
+5V
1
ST4
NW1
4K7
TP2
10K
NW1
4K7
3
1N4148
D1
REL1
R3
47 3W
R27
4K75
T2
BSS110
7
8
1
NW1
4K7
T7
BS170
C17
150n/630V
3
GP0
2
GP5
5
D5
1N4148
R2
20
GP4
IC2
4
V1
BTW69-800
R1
150
NW1
4K7
12C671/P
5
GP2
GP1
GP3
4
C19
100p
2
NW1
4K7
6
C4
100p