N-MOSFET AMP CONTROL BOARD
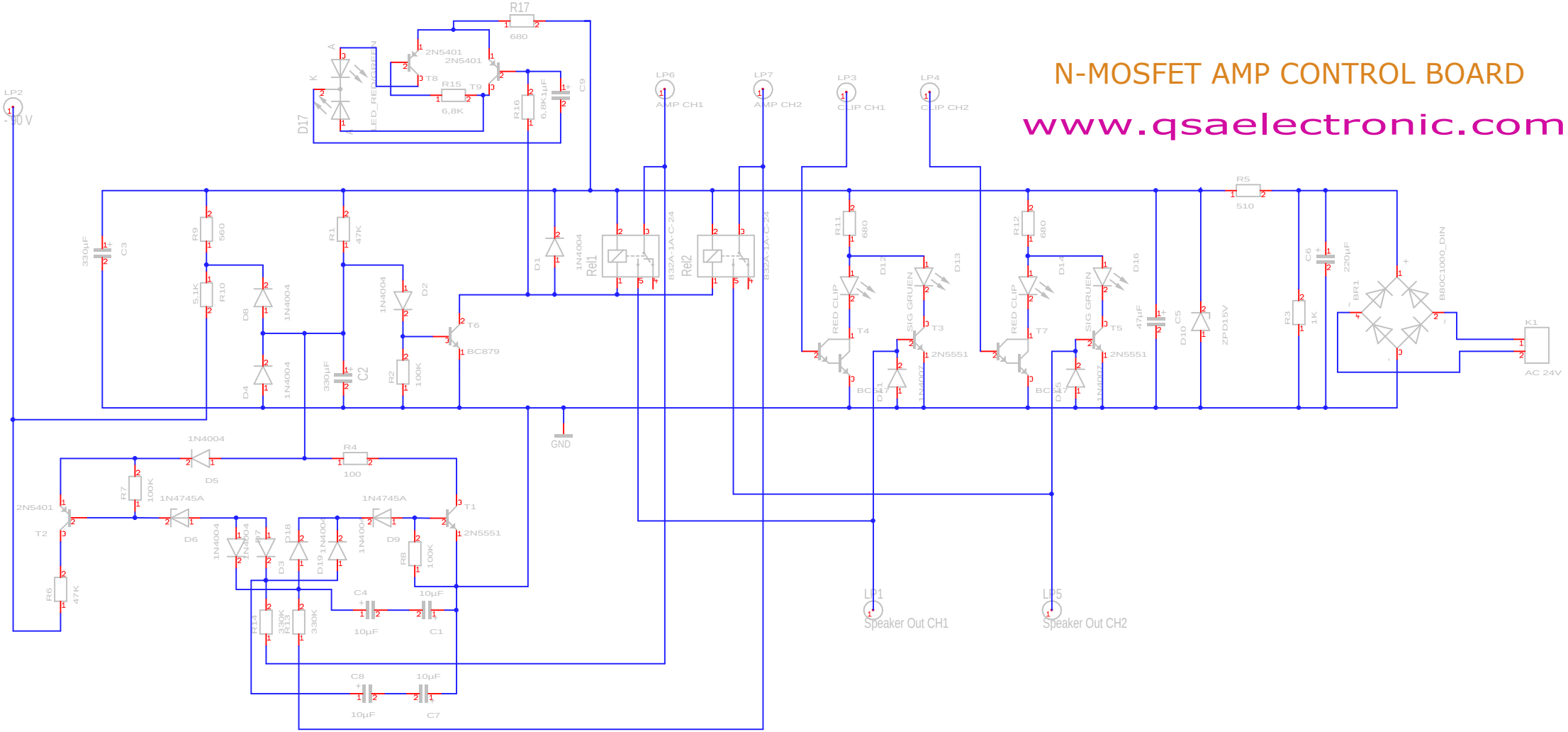
www.qsaelectronic.com