# DX Trust

©2009 Carlos Mergulhão

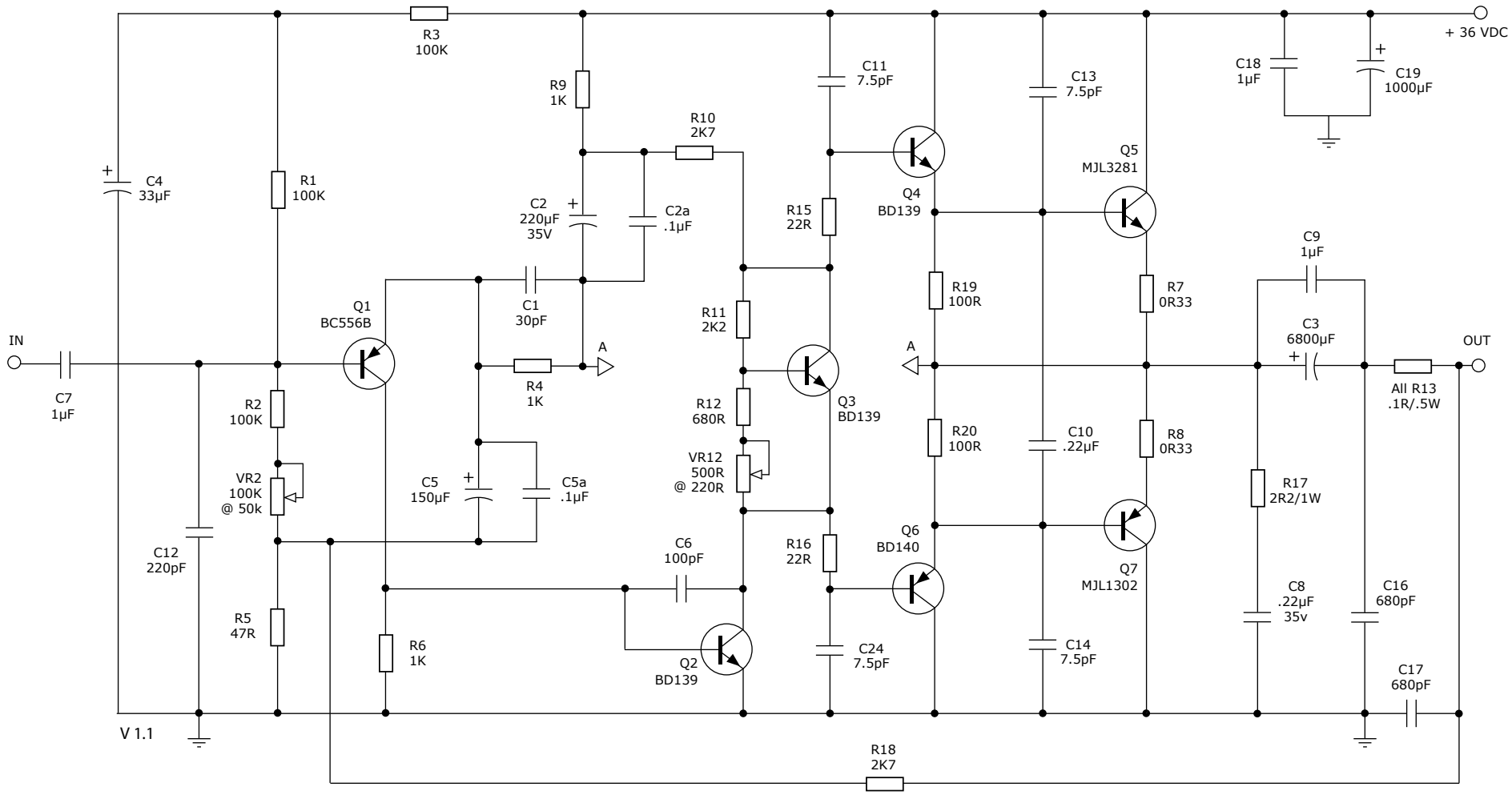


Construction Notes:

- All capacitors 25V except C2 & C8 which can be 35V - 50V. All resistors .25 to .5 W except where noted.
- C5 needs to be very close to 150µF. You may use parallel 100µF + 47µF, or 68µF + 82µF if you don't have a 150µF capacitor.
- Any transistors may be substituted as long as you don't exceed their voltage, current or SOA specs.