# half bridge smps gtG transfo gatedrive
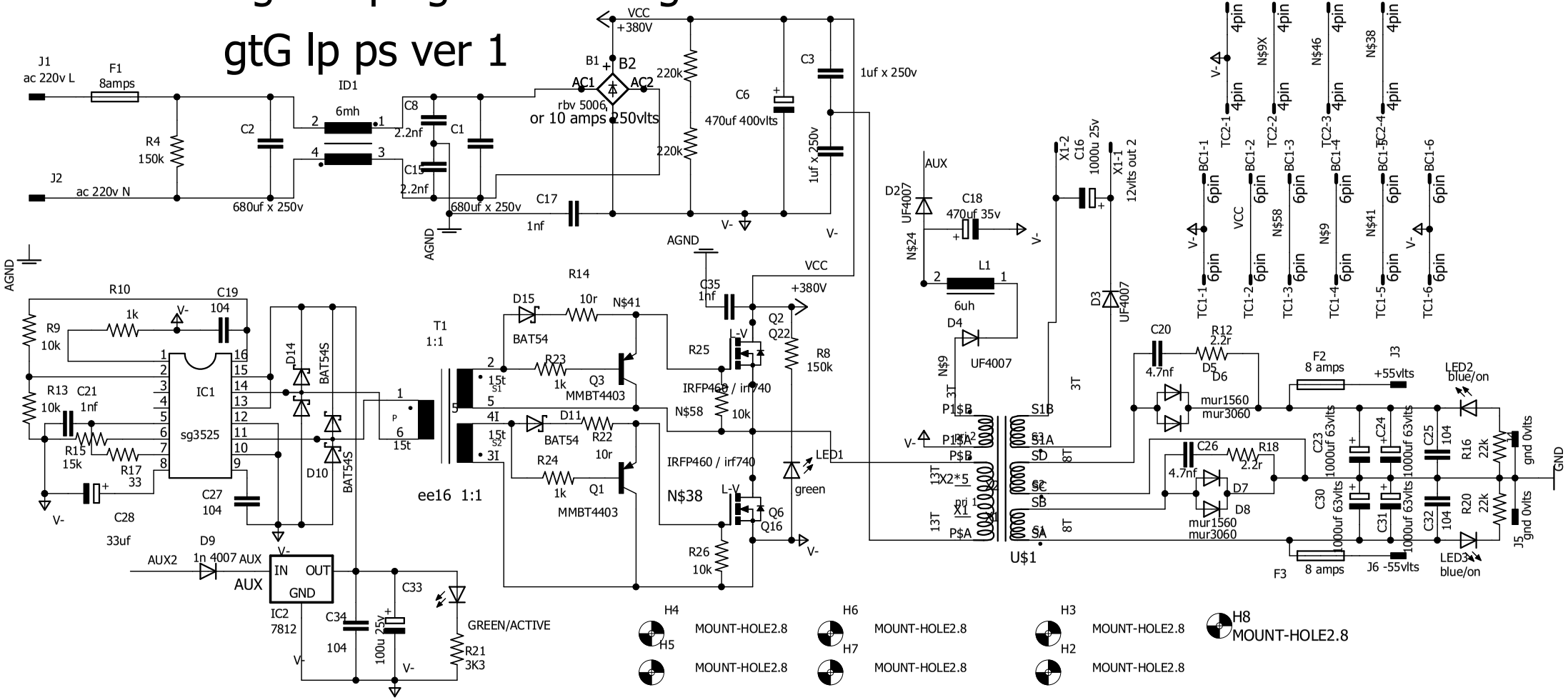
## gtG lp ps ver 1