Transistor Shunt Regulator

Analog Metric

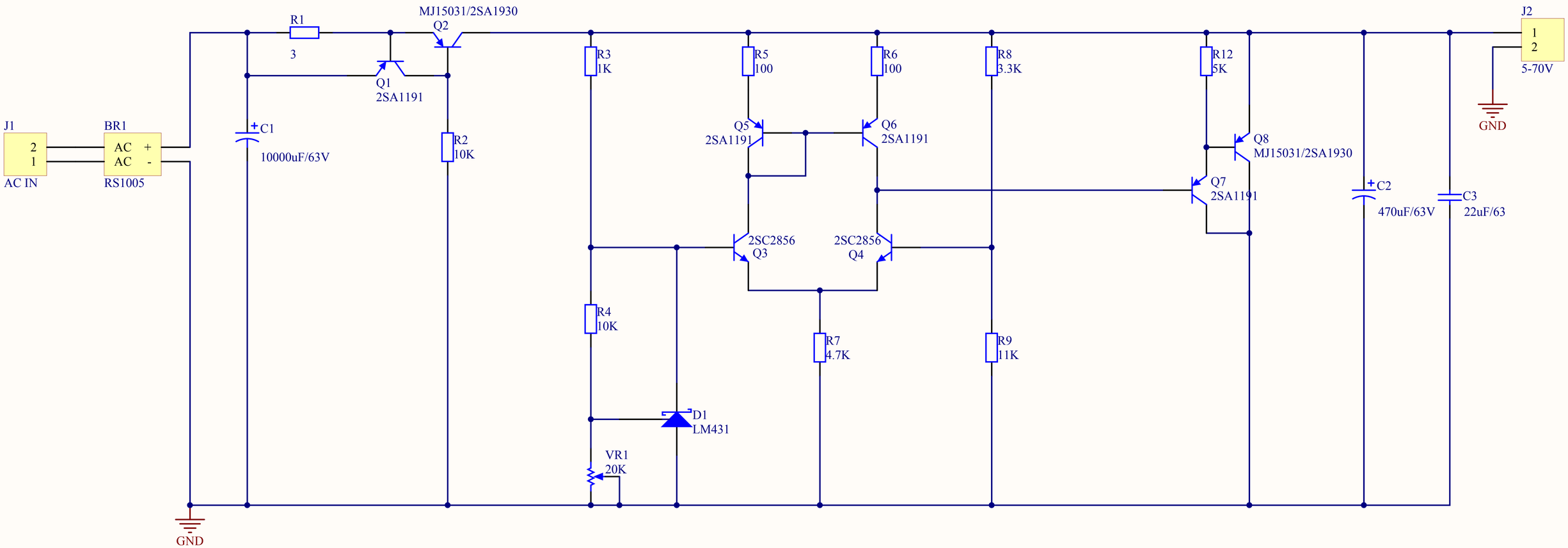

Title		
Size A4	Number	Revision
Date: 20/1/2010		Sheet of
File: \\..\LV Shunt Regulator.SchDoc		Drawn By: