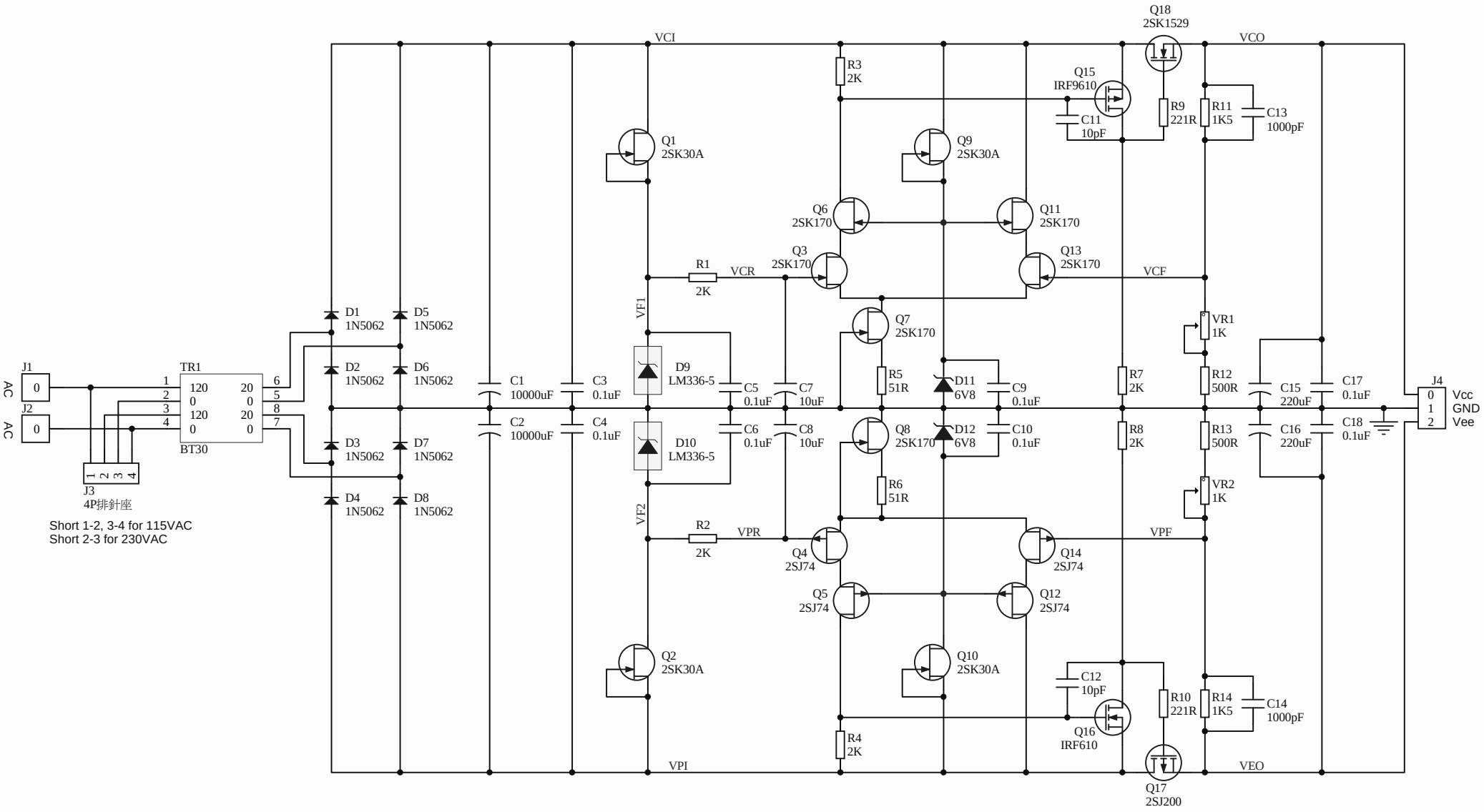

Absolute ALL-FET Regulator

DIYZONE Your own audio art