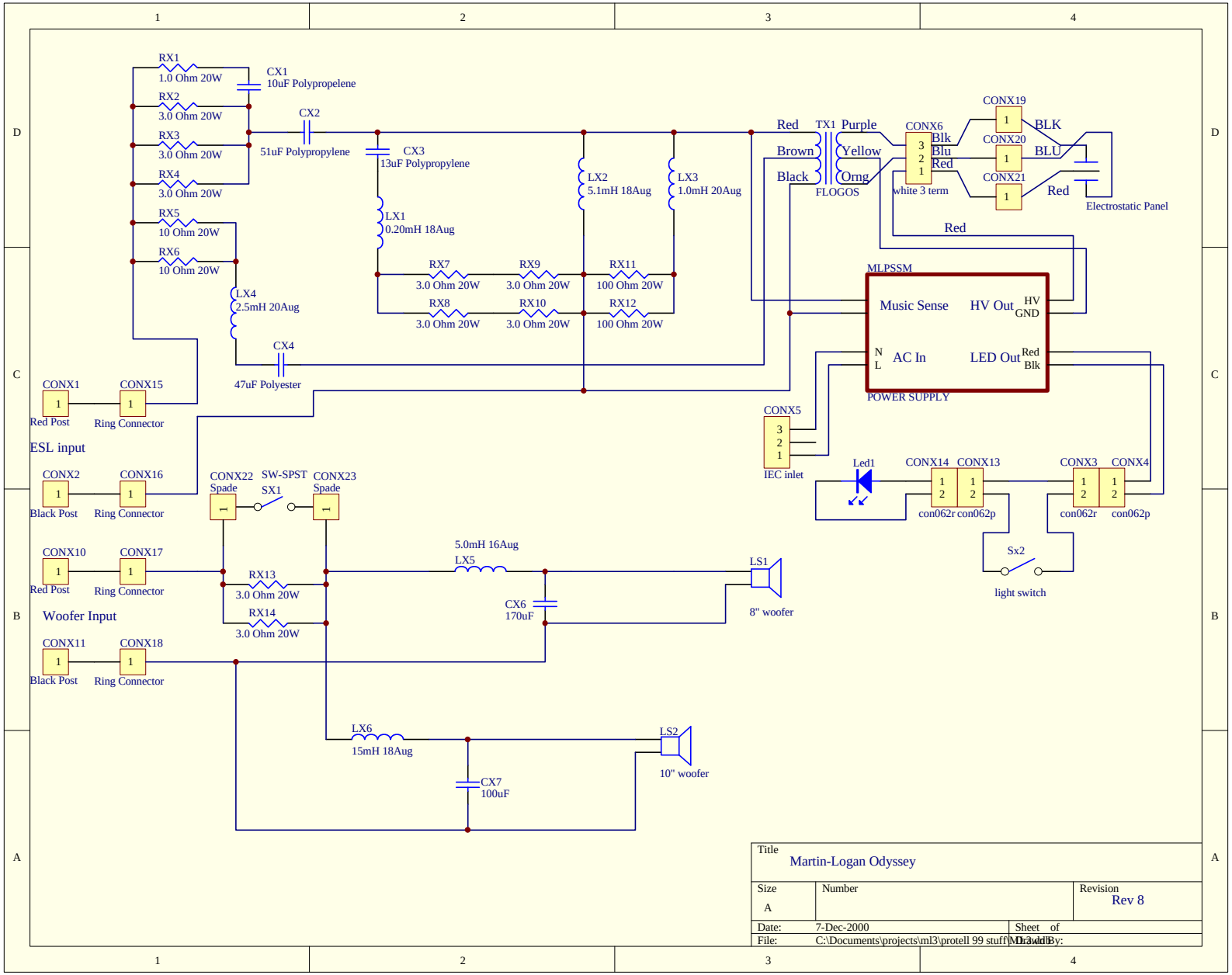
RX1
1.0 Ohm 20W
RX2
3.0 Ohm 20W
RX3
3.0 Ohm 20W
RX4
3.0 Ohm 20W
RX5
10 Ohm 20W
RX6
10 Ohm 20W
CX1
10uF Polypropelene
CX2
51uF Polypropylene
CX3
13uF Polypropylene
LX1
0.20mH 18Aug
LX2
5.1mH 18Aug
LX3
1.0mH 20Aug
LX4
2.5mH 20Aug
CX4
47uF Polyester
RX7
3.0 Ohm 20W
RX8
3.0 Ohm 20W
RX9
3.0 Ohm 20W
RX10
3.0 Ohm 20W
RX11
100 Ohm 20W
RX12
100 Ohm 20W
Red
Brown
Black
TX1
Purple
Yellow
Orng
FLOGOS
CONX6
Blk
Blu
Red
white 3 term
CONX19
BLK
CONX20
BLU
CONX21
Red
Electrostatic Panel
Red
MLPSSM
Music Sense
HV Out
HV
GND
N
L
AC In
LED Out
Red
Blk
POWER SUPPLY
CONX5
IEC inlet
Led1
CONX14
CONX13
con062r
con062p
CONX3
CONX4
con062r
con062p
Sx2
light switch
CONX1
Red Post
CONX15
Ring Connector
ESL input
CONX2
Black Post
CONX16
Ring Connector
CONX22
Spade
SW-SPST
SX1
CONX23
Spade
CONX10
Red Post
CONX17
Ring Connector
Woofer Input
CONX11
Black Post
CONX18
Ring Connector
RX13
3.0 Ohm 20W
RX14
3.0 Ohm 20W
5.0mH 16Aug
LX5
CX6
170uF
LS1
8" woofer
LX6
15mH 18Aug
CX7
100uF
LS2
10" woofer
Title
Martin-Logan Odyssey
Size
A
Number
Revision
Rev 8
Date:
7-Dec-2000
Sheet of
File:
C:\Documents\projects\ml3\protell 99 stuff\ml3.ddb
Drawn By: