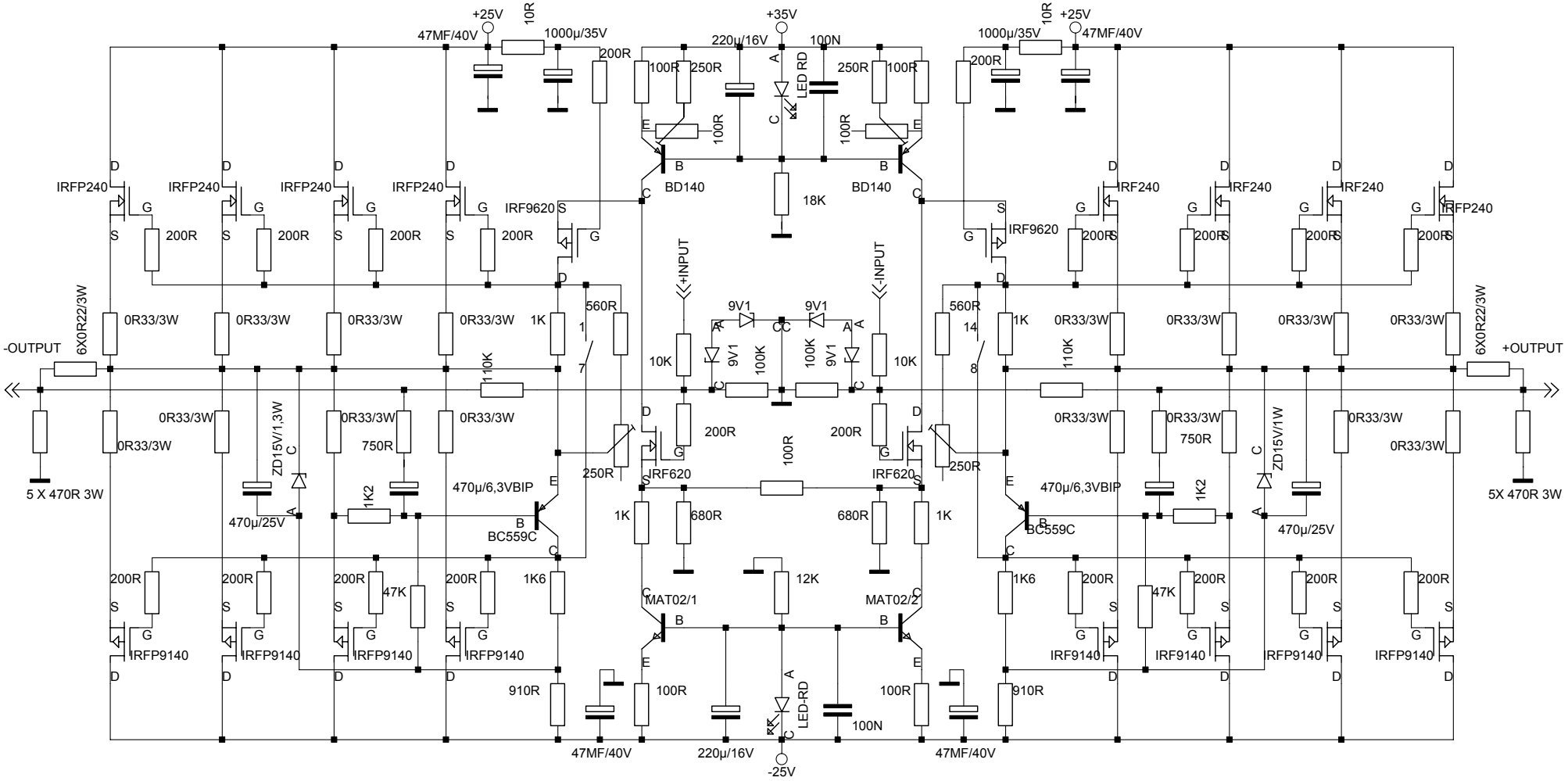

REV: D	DATE: 15-01-2003	ENG: U. C. TRINKS
PROJECT: XA1 V3		
COMPANY: ADDRESS: KEINERGASSE 8 CITY : VIENNA COUNTRY: AUSTRIA		
INITIAL DATE: 01-01-2002	PAGE: 1	OF: 1