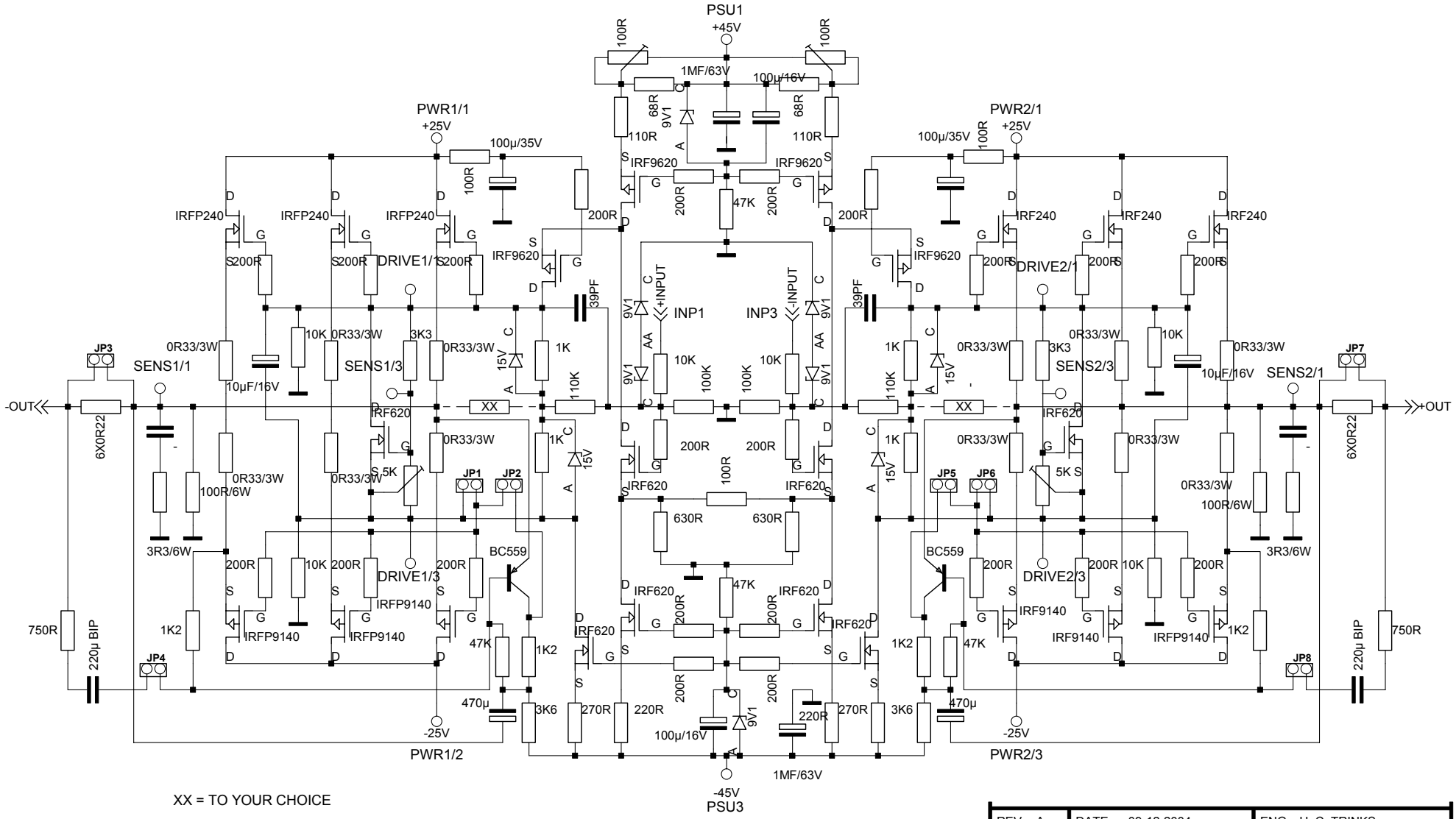

REV: A	DATE: 09-12-2004	ENG: U. C. TRINKS
PROJECT: UNIVERSALX		
COMPANY: ADDRESS: KEINERGASSE 8 CITY : VIENNA COUNTRY: AUSTRIA		
INITIAL DATE: 01-01-2002	PAGE: 1	OF: 1