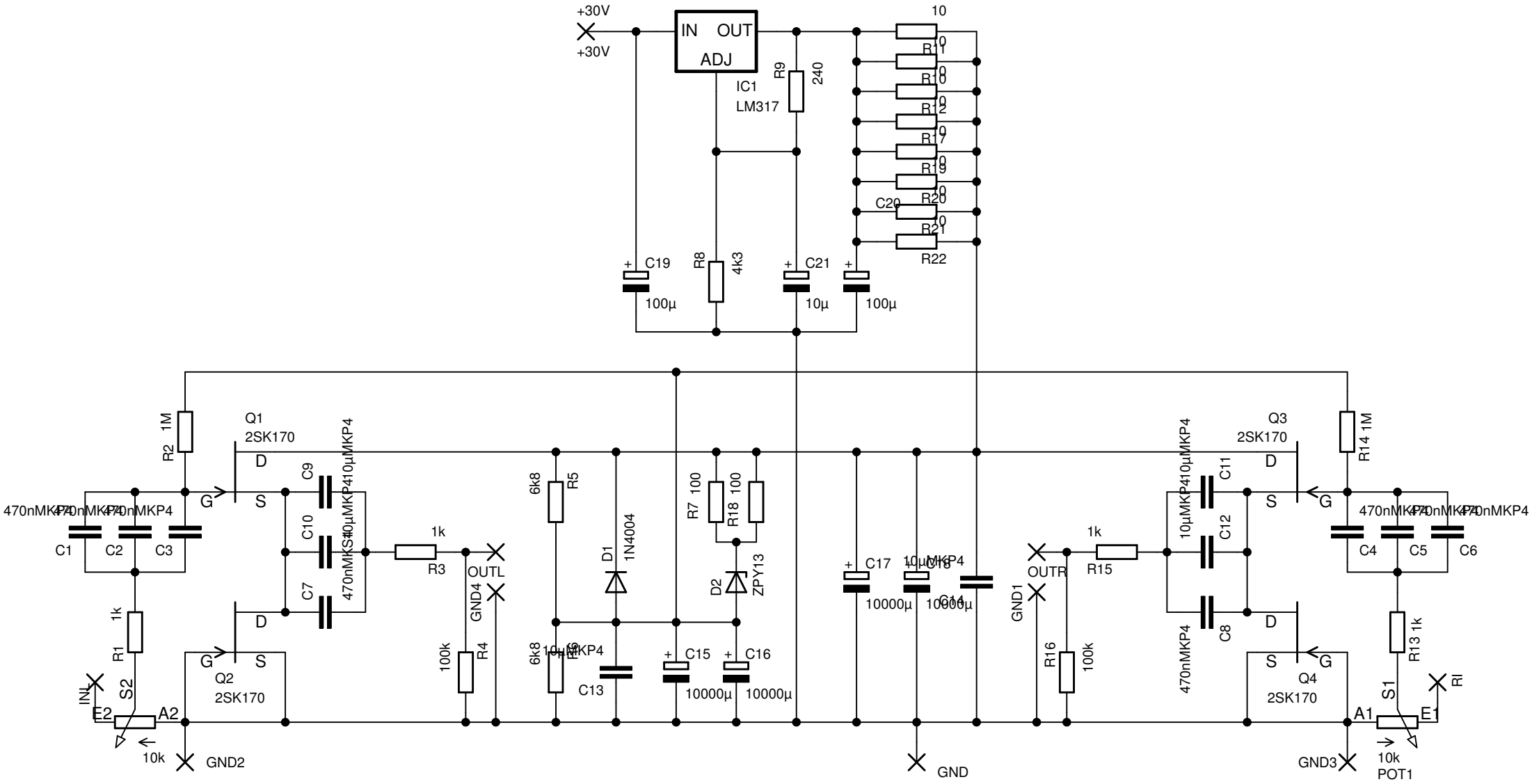
+30V
+30V
IN
OUT
ADJ
IC1
LM317
R9
240
R8
4k3
C19
100µ
C21
10µ
100µ
10
R11
R12
R17
R19
R20
R21
R22
C20
R2
1M
Q1
2SK170
D
G
S
C9
C10
C7
470nMKP4
10µMKP4
470nMKP4
C1
C2
C3
R1
1k
IN
S2
E2
A2
10k
GND2
Q2
2SK170
R3
1k
OUTL
GND4
R4
100k
6k8
R5
D1
1N4004
R7
100
R18
100
D2
ZPY13
C13
C15
C16
10000µ
10000µ
C17
10000µ
C14
GND
OUTR
GND1
R15
1k
R16
100k
Q3
2SK170
R14
1M
C11
C12
C8
Q4
2SK170
C4
C5
C6
R13
1k
S1
RI
A1
E1
10k
POT1
GND3