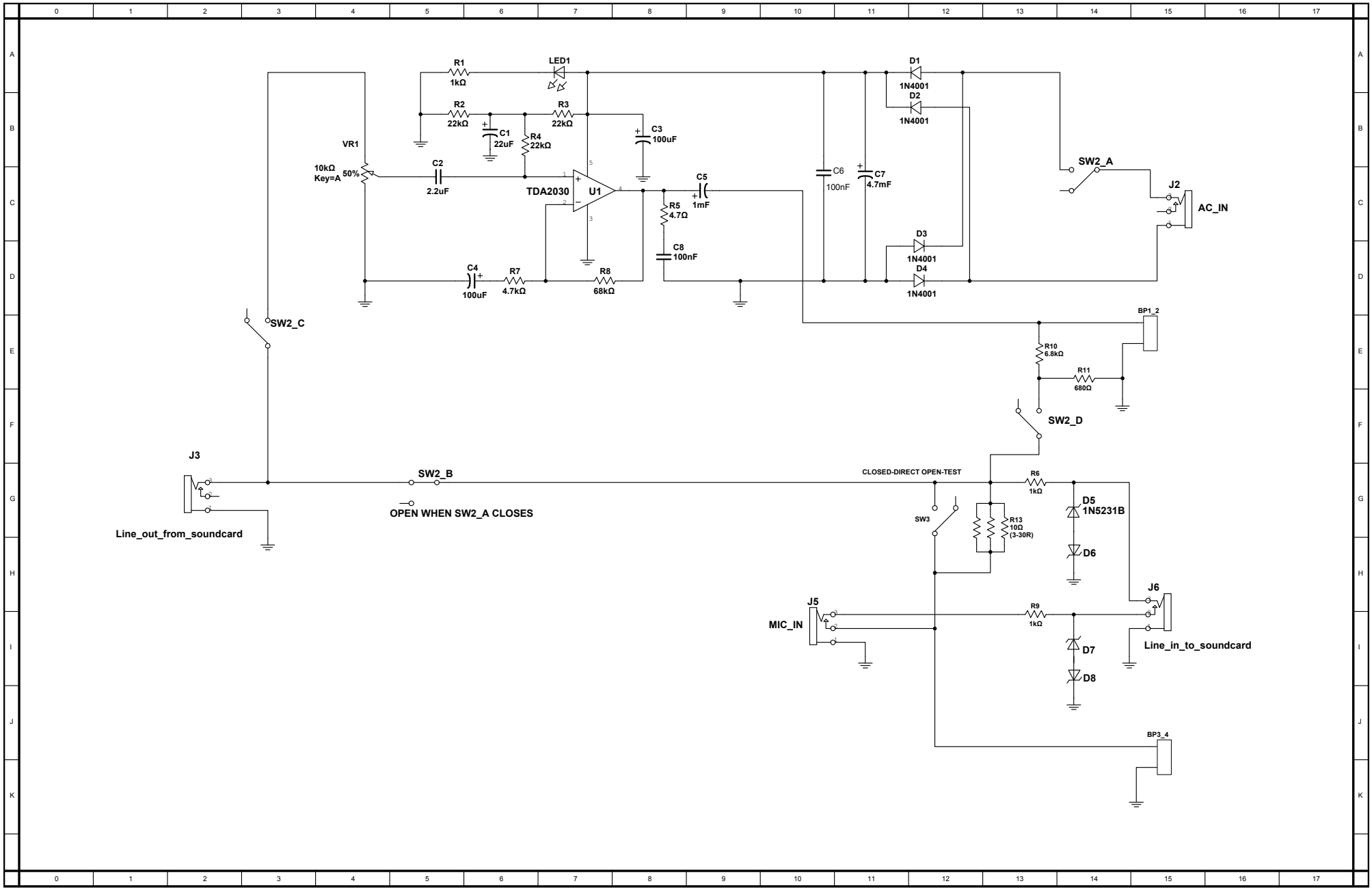
R1
1kΩ
LED1
R2
22kΩ
C1
22uF
R3
22kΩ
R4
22kΩ
C3
100uF
VR1
10kΩ
Key=A
50%
C2
2.2uF
TDA2030
U1
C5
1mF
R5
4.7Ω
C8
100nF
C4
100uF
R7
4.7kΩ
R8
68kΩ
C6
100nF
C7
4.7mF
D1
1N4001
D2
1N4001
D3
1N4001
D4
1N4001
SW2_A
J2
AC_IN
BP1_2
R10
6.8kΩ
R11
680Ω
SW2_C
SW2_D
J3
Line_out_from_soundcard
SW2_B
OPEN WHEN SW2_A CLOSES
CLOSED-DIRECT OPEN-TEST
R6
1kΩ
D5
1N5231B
D6
SW3
R13
10Ω
(3-30R)
J6
J5
MIC_IN
R9
1kΩ
D7
D8
Line_in_to_soundcard
BP3_4