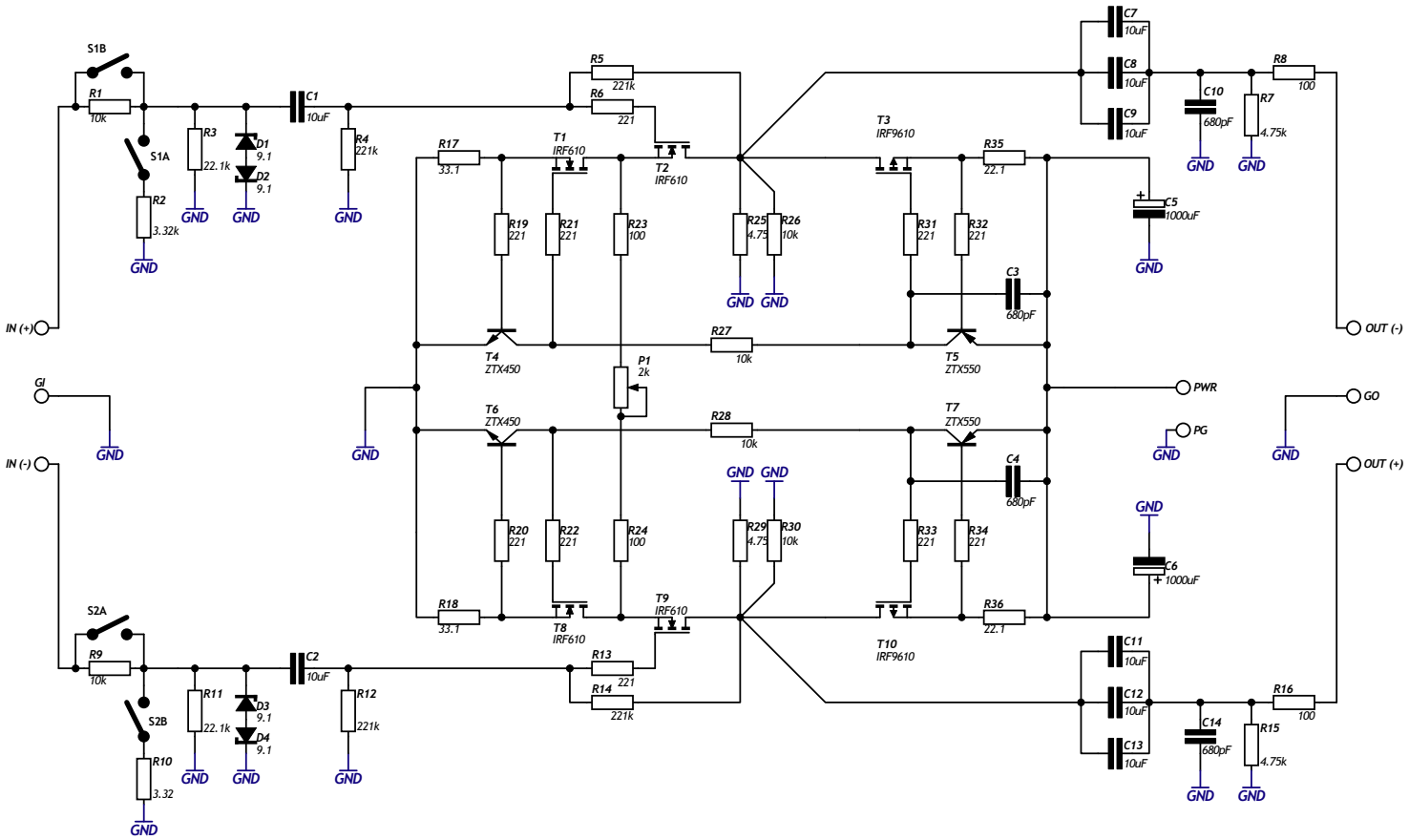

PASS LABS Aleph P 1.7 clone
Damian Antoniak