T.H.D. ANALYSER

STATE VARIABLE OSCILLATOR MODULE
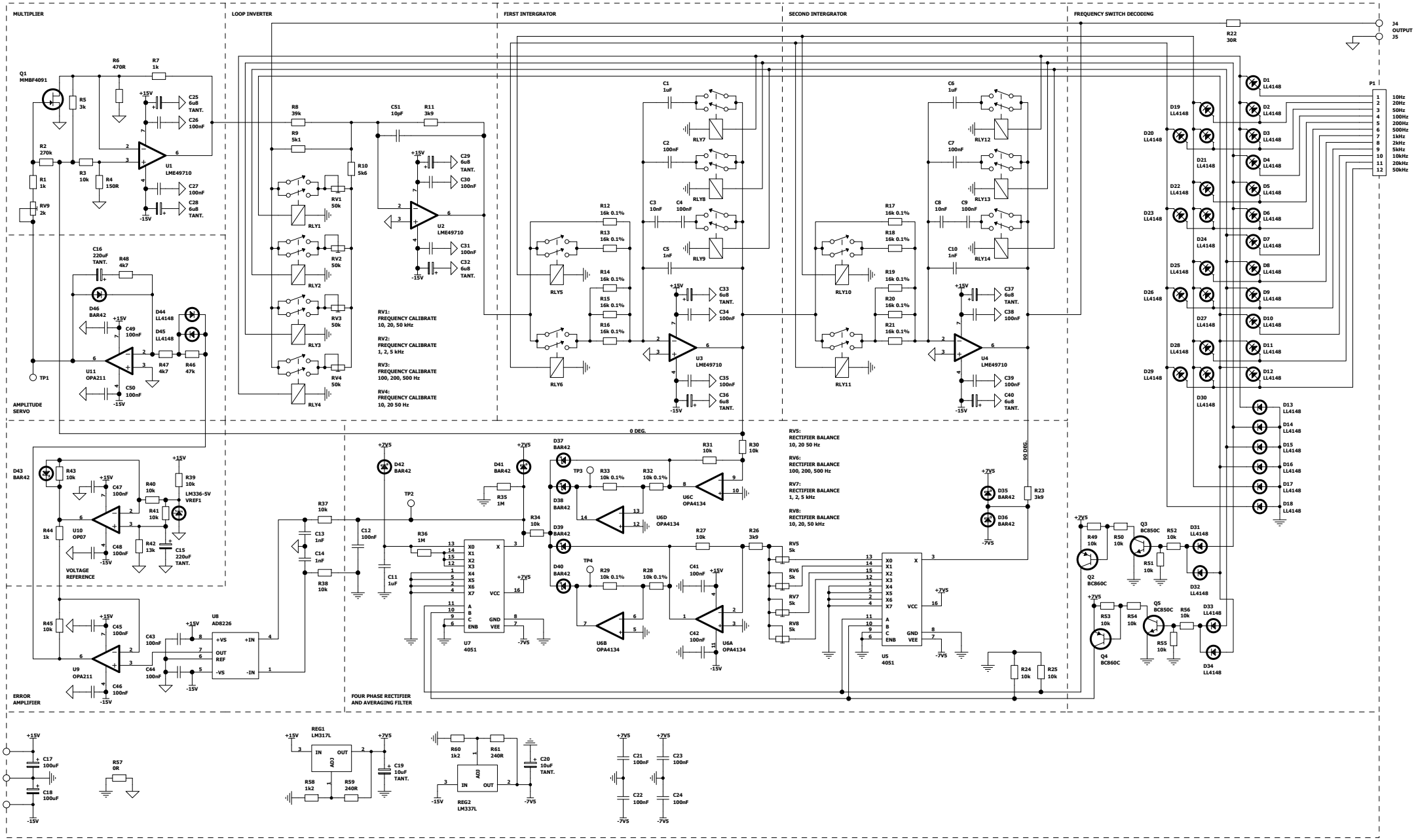
GLEN KLEINSCHMIDT MAY 2012