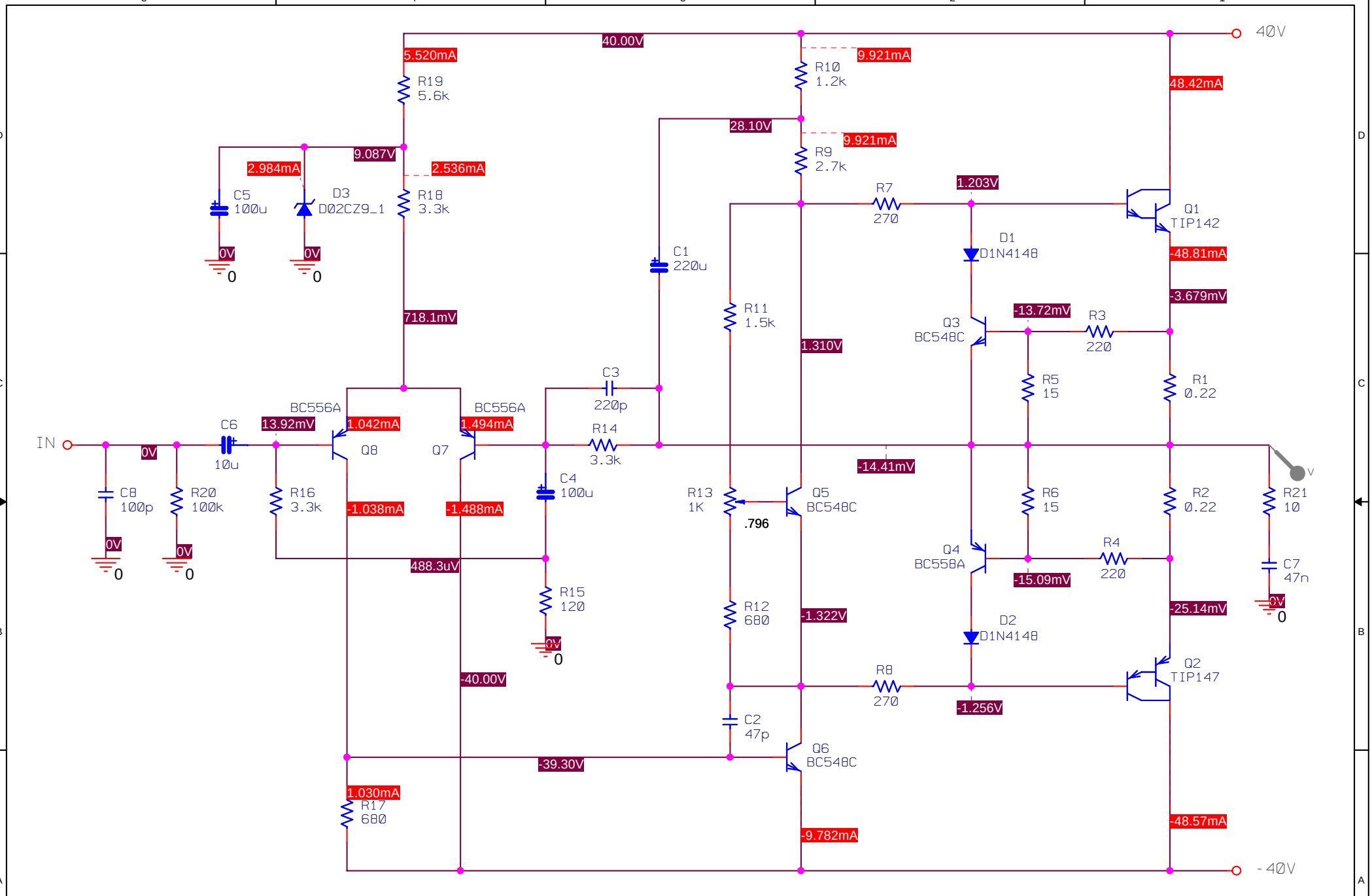

Size	Document Number	Rev
A	ELEKTOR 1982 SCHEMATIC	A
Date: Sunday, December 12, 2004	Sheet 1 of 1	

** Profile: "SCHEMATIC1-Transient" [C:\DOCUMENTS AND SETTINGS\BVP\DESKTOP\elektor1982\Elektor1982-PSpic...
Date/Time run: 12/12/04 13:45:18 Temperature: 27.0

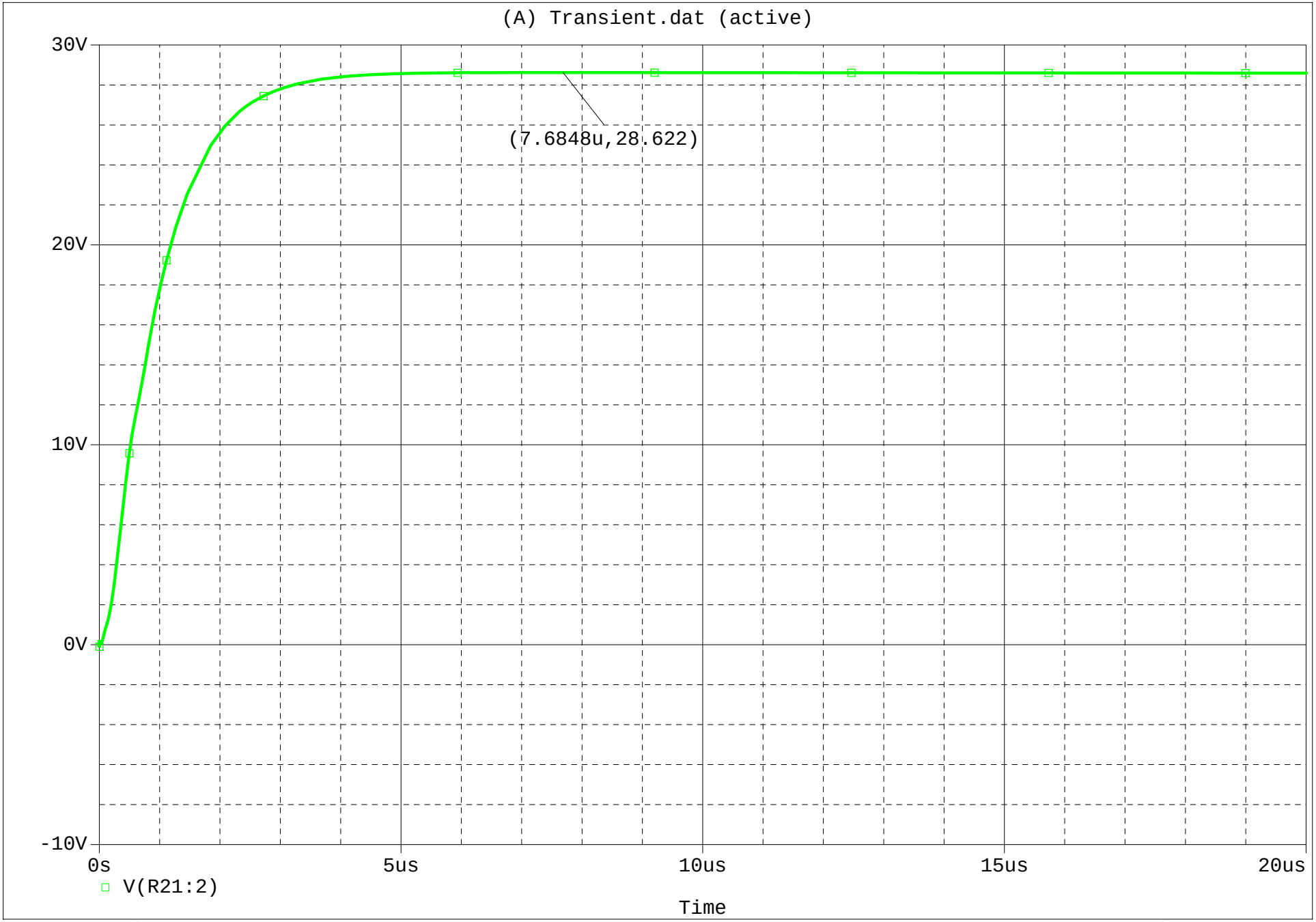

Date: December 12, 2004 Page 1 Time: 13:46:53
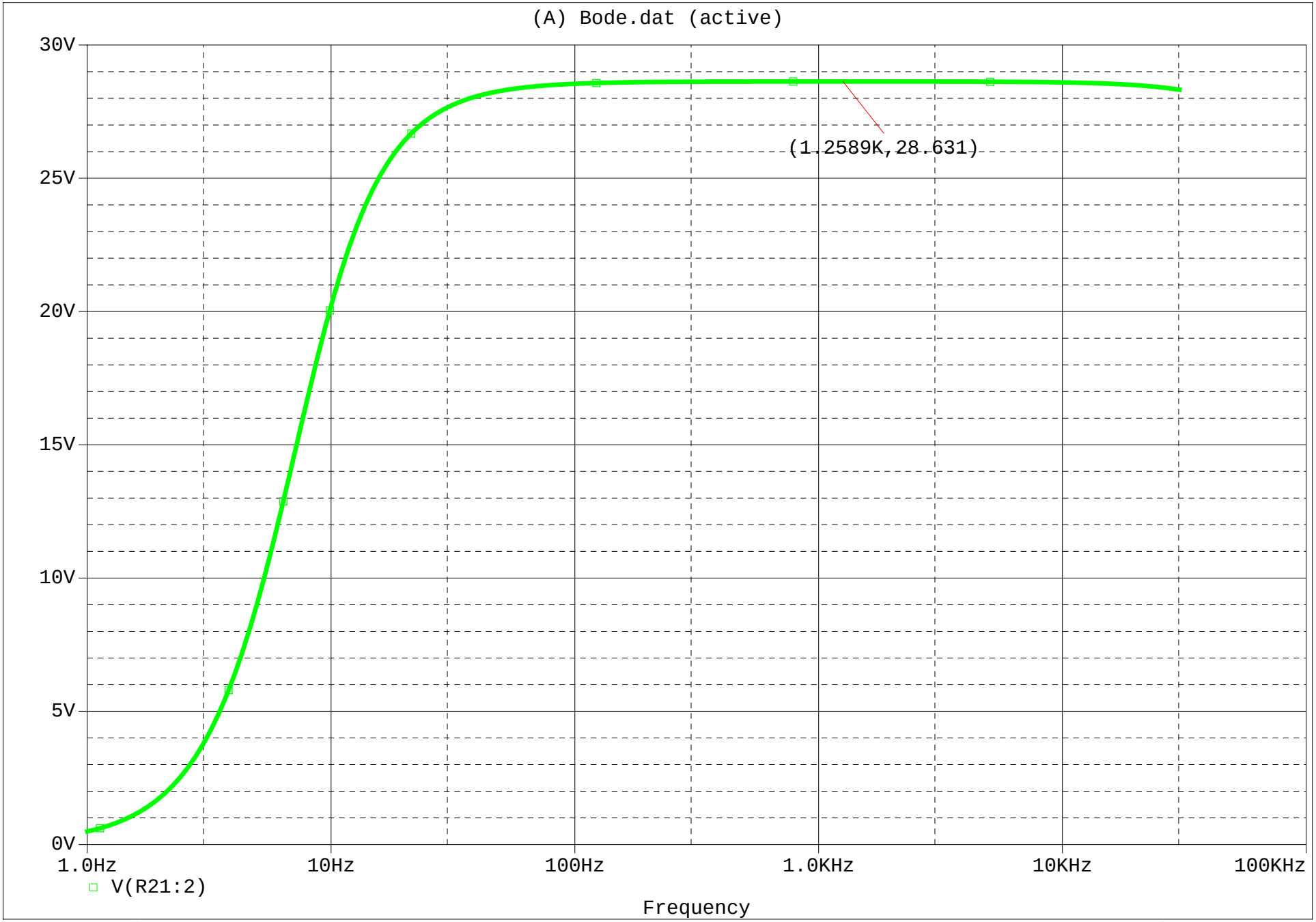
** Profile: "SCHEMATIC1-Bode" [C:\DOCUMENTS AND SETTINGS\BVP\DESKTOP\elektor1982\Elektor1982-PSpiceFile...
Date/Time run: 12/12/04 13:47:27 Temperature: 27.0