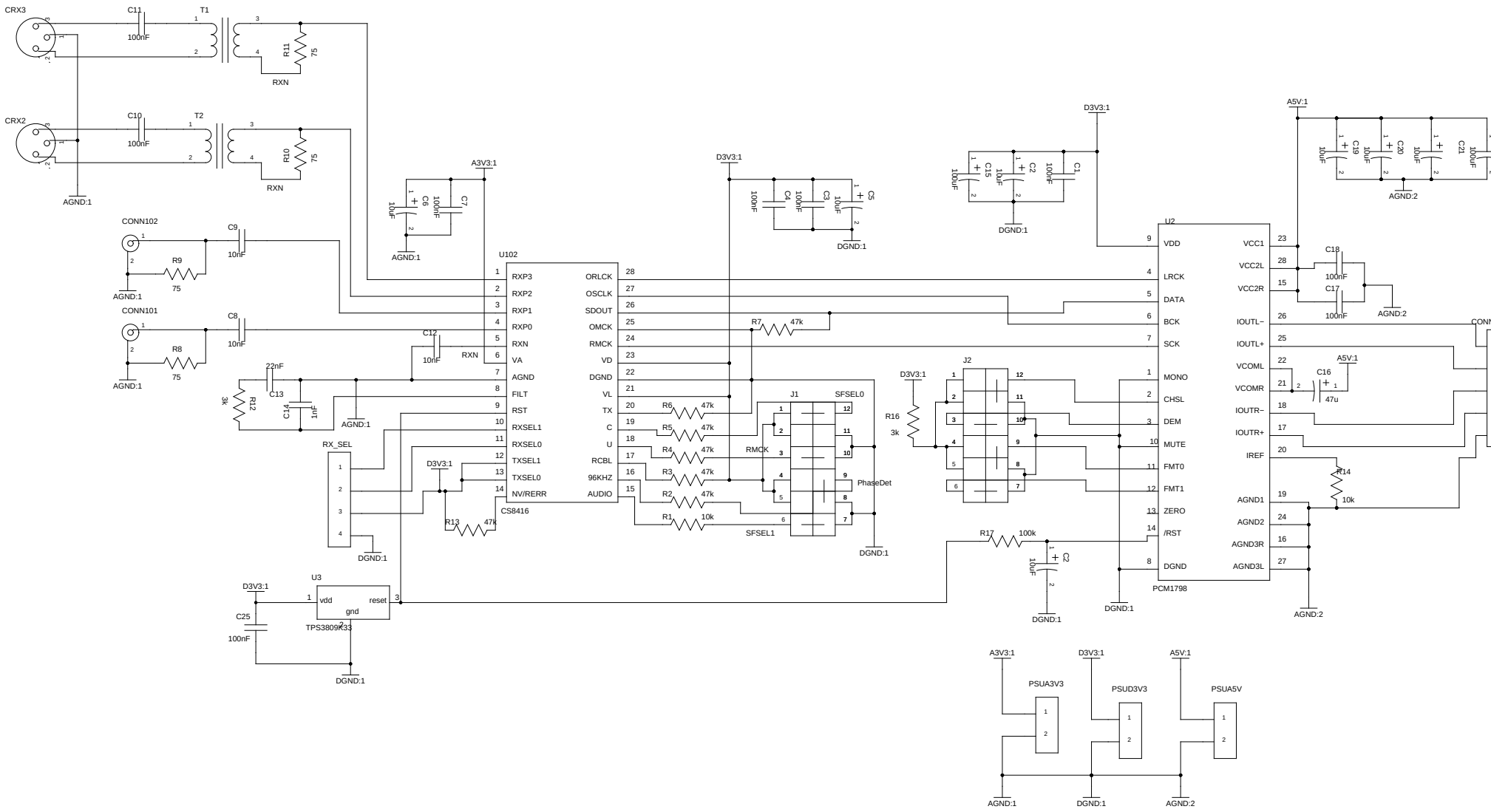
CRX3
CRX2
C11
C10
100nF
T1
T2
R11
R10
75
RXN
AGND:1
CONN102
CONN101
C9
C8
10nF
R9
R8
C12
22nF
C13
C14
1nF
R12
3k
RX_SEL
U102
CS8416
RXP3
RXP2
RXP1
RXP0
RXN
VA
AGND
FILT
RST
RXSEL1
RXSEL0
TXSEL1
TXSEL0
NV/RERR
ORLCK
OSCLK
SDOUT
OMCK
RMCK
VD
DGND
VL
TX
C
U
RCBL
96KHZ
AUDIO
A3V3:1
D3V3:1
DGND:1
C6
C7
100nF
C4
C3
C5
C15
C2
C1
R7
47k
R6
R5
R4
R3
R2
R1
10k
J1
SFSEL0
SFSEL1
RMCK
PhaseDet
J2
R16
R13
U3
vdd
reset
gnd
TPS3809K33
C25
U2
PCM1798
VDD
LRCK
DATA
BCK
SCK
MONO
CHSL
DEM
MUTE
FMT0
FMT1
ZERO
/RST
DGND
VCC1
VCC2L
VCC2R
IOUTL−
IOUTL+
VCOML
VCOMR
IOUTR−
IOUTR+
IREF
AGND1
AGND2
AGND3R
AGND3L
A5V:1
AGND:2
C19
C20
C21
C18
C17
C16
47u
R14
R17
100k
C22
PSUA3V3
PSUD3V3
PSUA5V