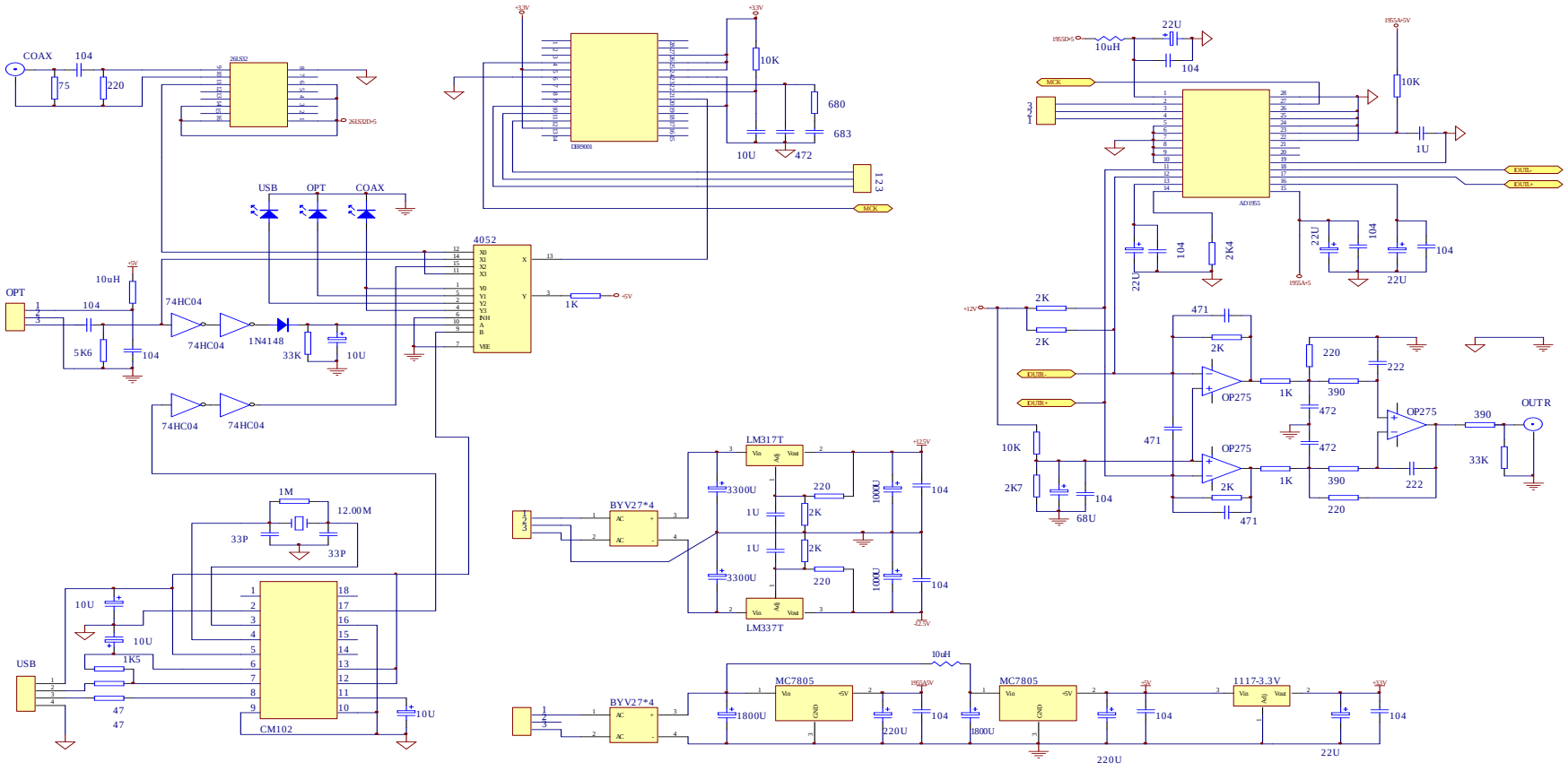

Title		
Size: C	Number	Revision
Date: 13-Mar-2010	Sheet of	
File: C:\Documents and Settings\Administrator\Desktop\Schematic\Schematic1.SCH	Drawn By:	

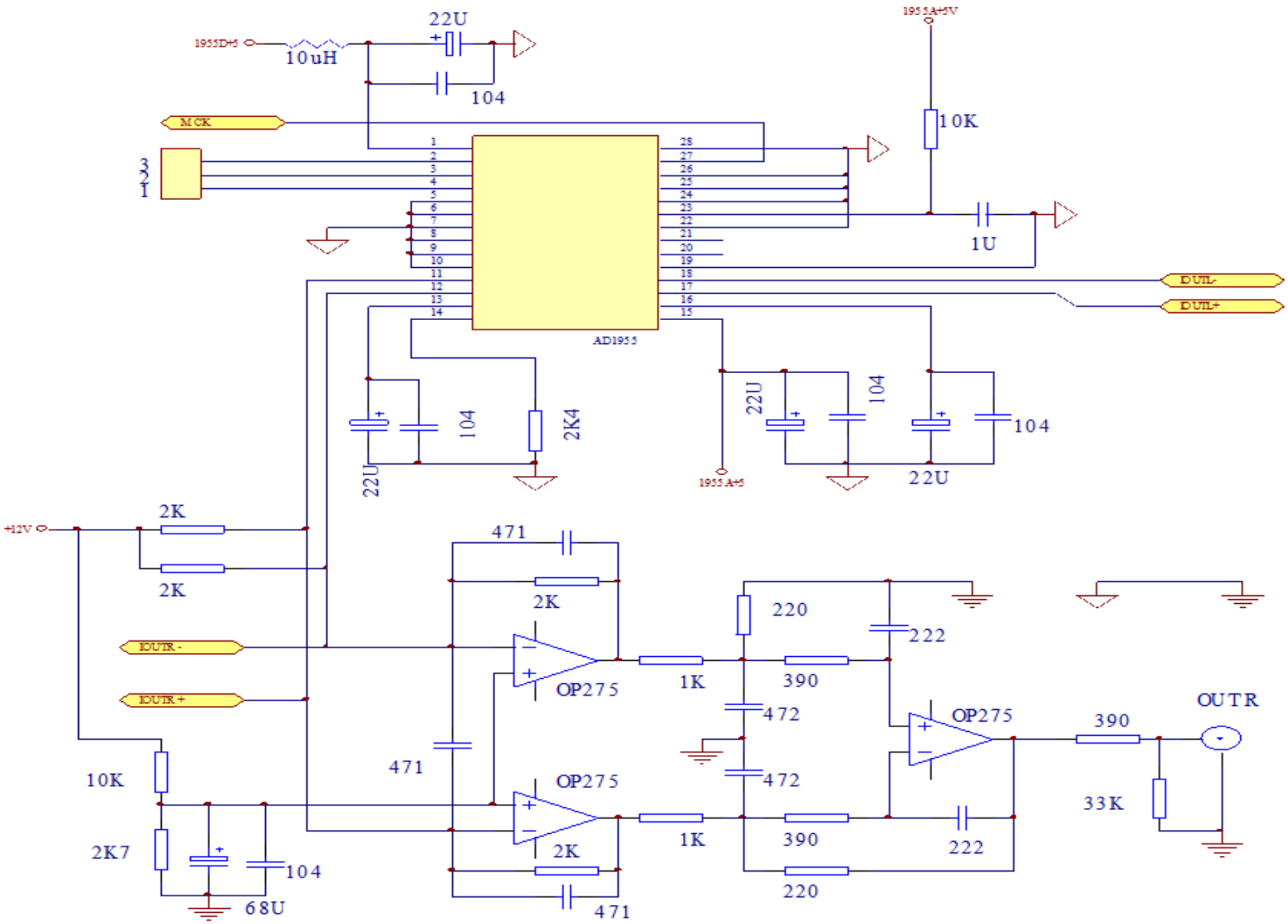
1955D+5
10uH
22U
104
MCK
3
2
1
1955A+5V
10K
1U
AD1955
DOUTL-
DOUTL+
22U
104
2K4
1955A+5
+12V
2K
2K
471
2K
DOUTR-
DOUTR+
OP275
1K
220
390
222
472
OP275
390
OUTR
33K
10K
2K7
104
68U
471
OP275
2K
1K
390
222
220
471

471 Cap = 470pF

472 = 4,700pF or .0047uf

473 = 0.047uF