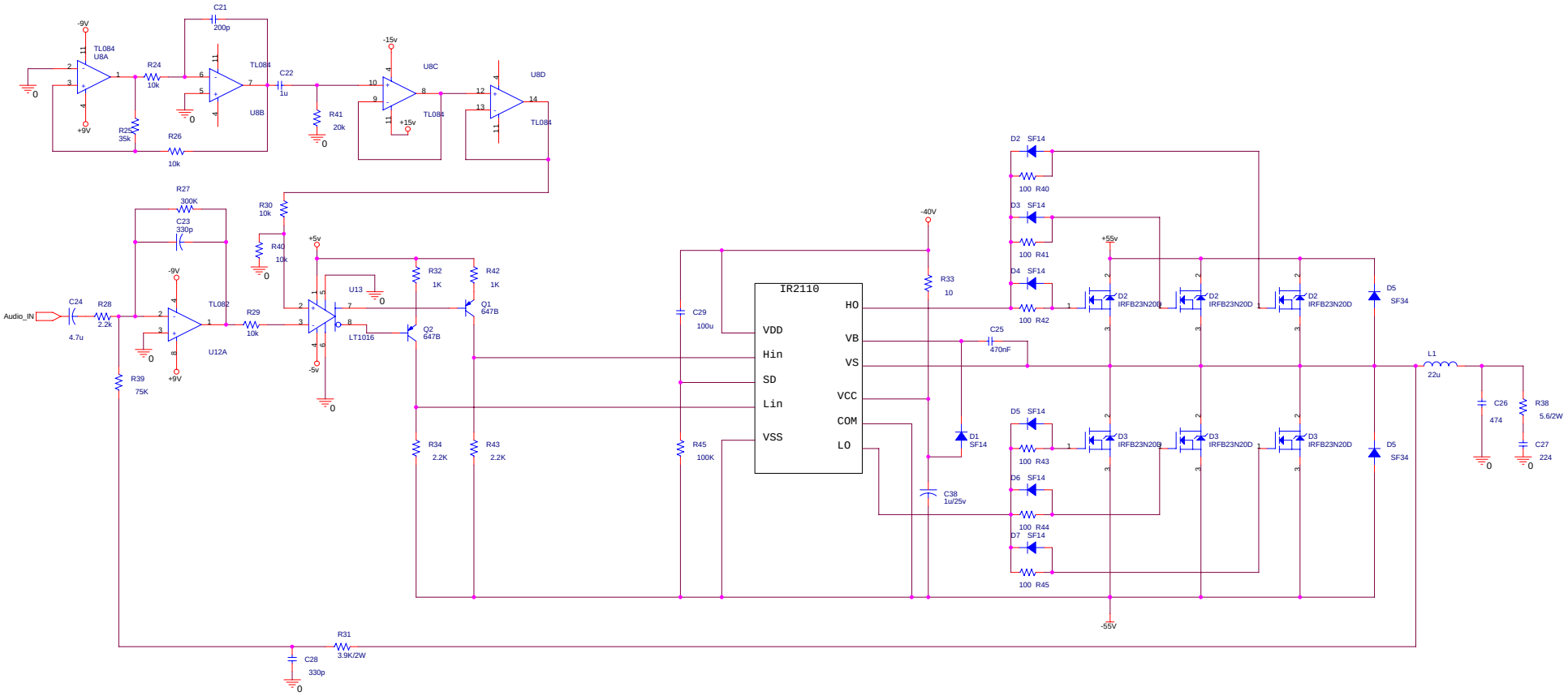

Title	<Title>	
Size C	Document Number <Doc>	Rev <RevCode>
Date: Thursday, March 30, 2006	Sheet 1 of 1	