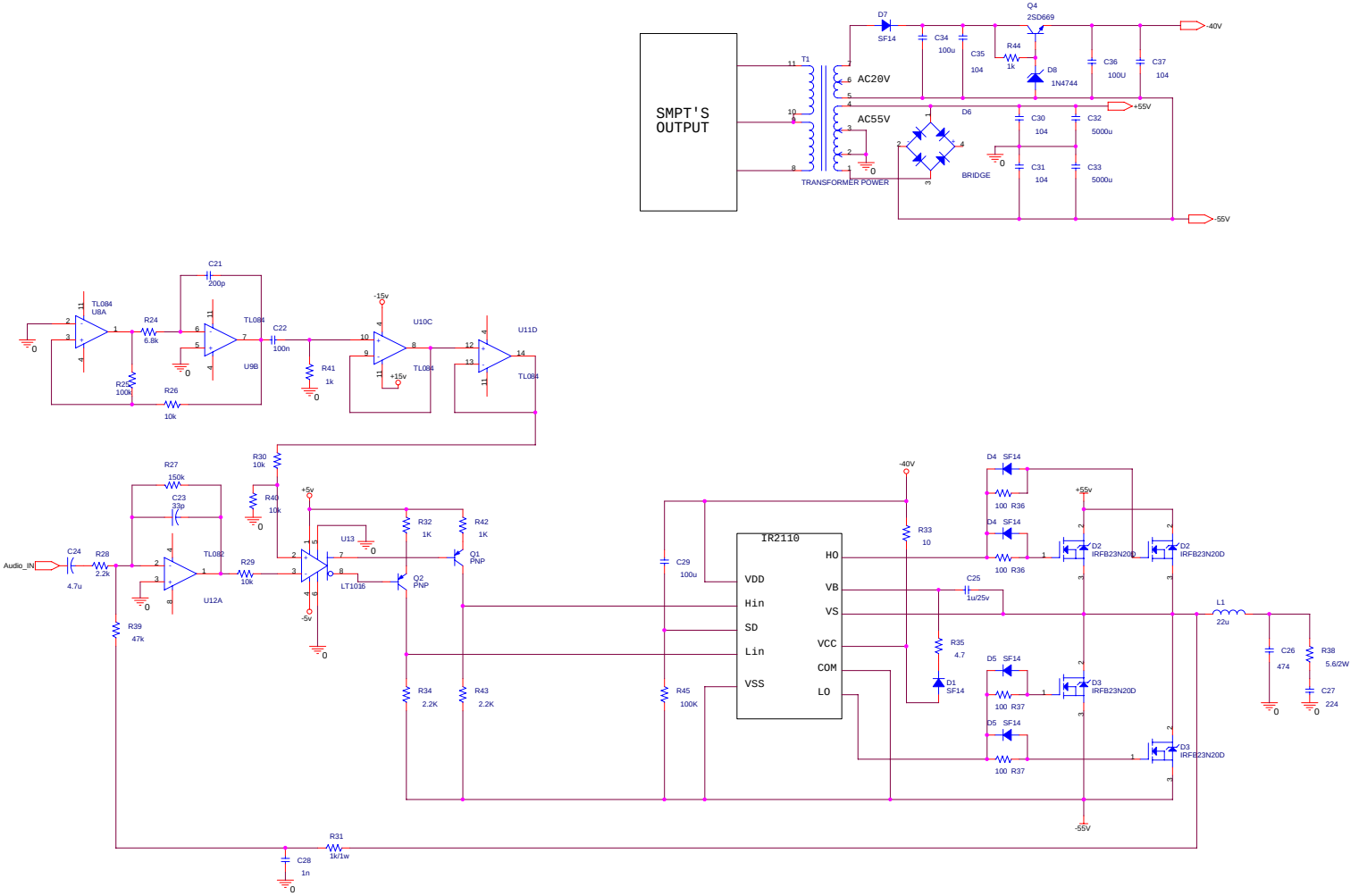

2005/12/25 By TitanChen ,MIT

Title	<Title>	
Size C	Document Number <Doc>	Rev <RevCode>
Date: Thursday, February 16, 2006	Sheet 1 of 1	