UcD-XLite -- All Discrete Class D Amplifier v.2 Final

Kartino Surodipo, August 2016

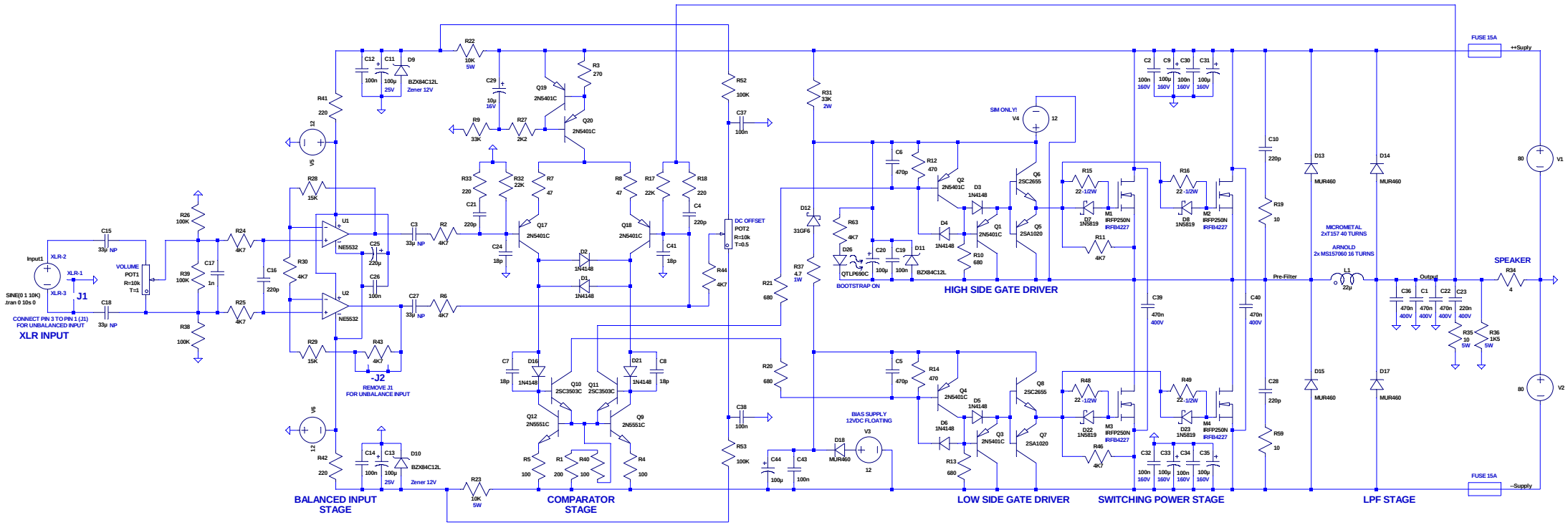

--- D:\LTC\Simulation_UcD_XLite\UcD-XLite V.2 Final.asc ---