# UcD-XLite -- All Discrete Class D Amplifier v.1b
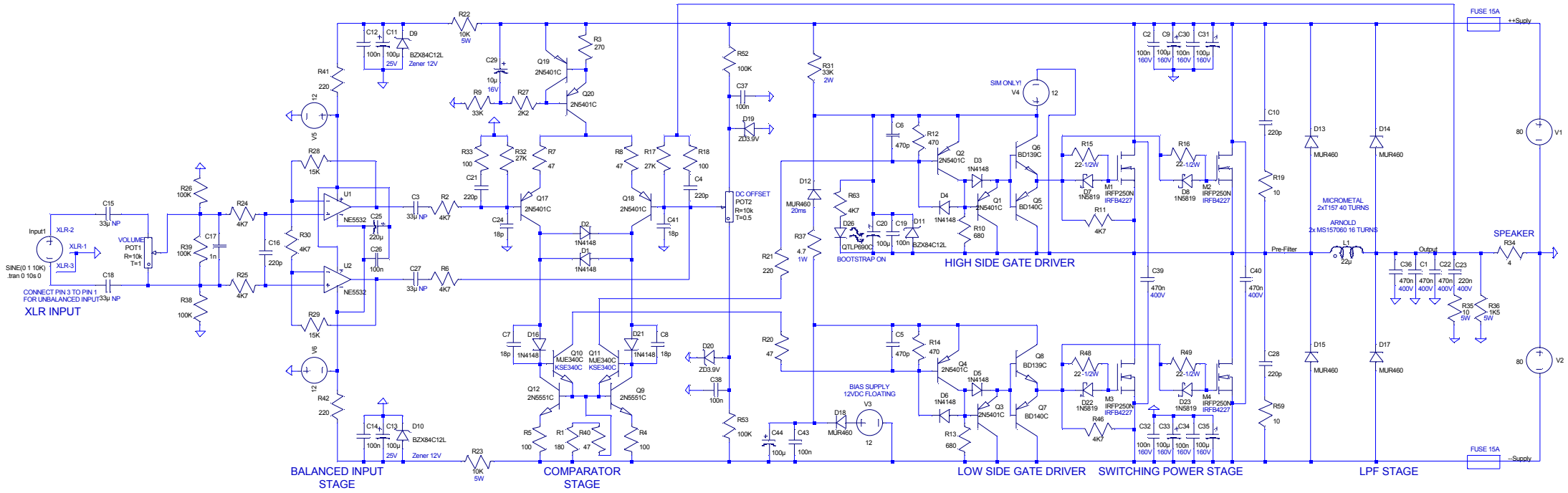
Kartino Surodipo, Jul 2016