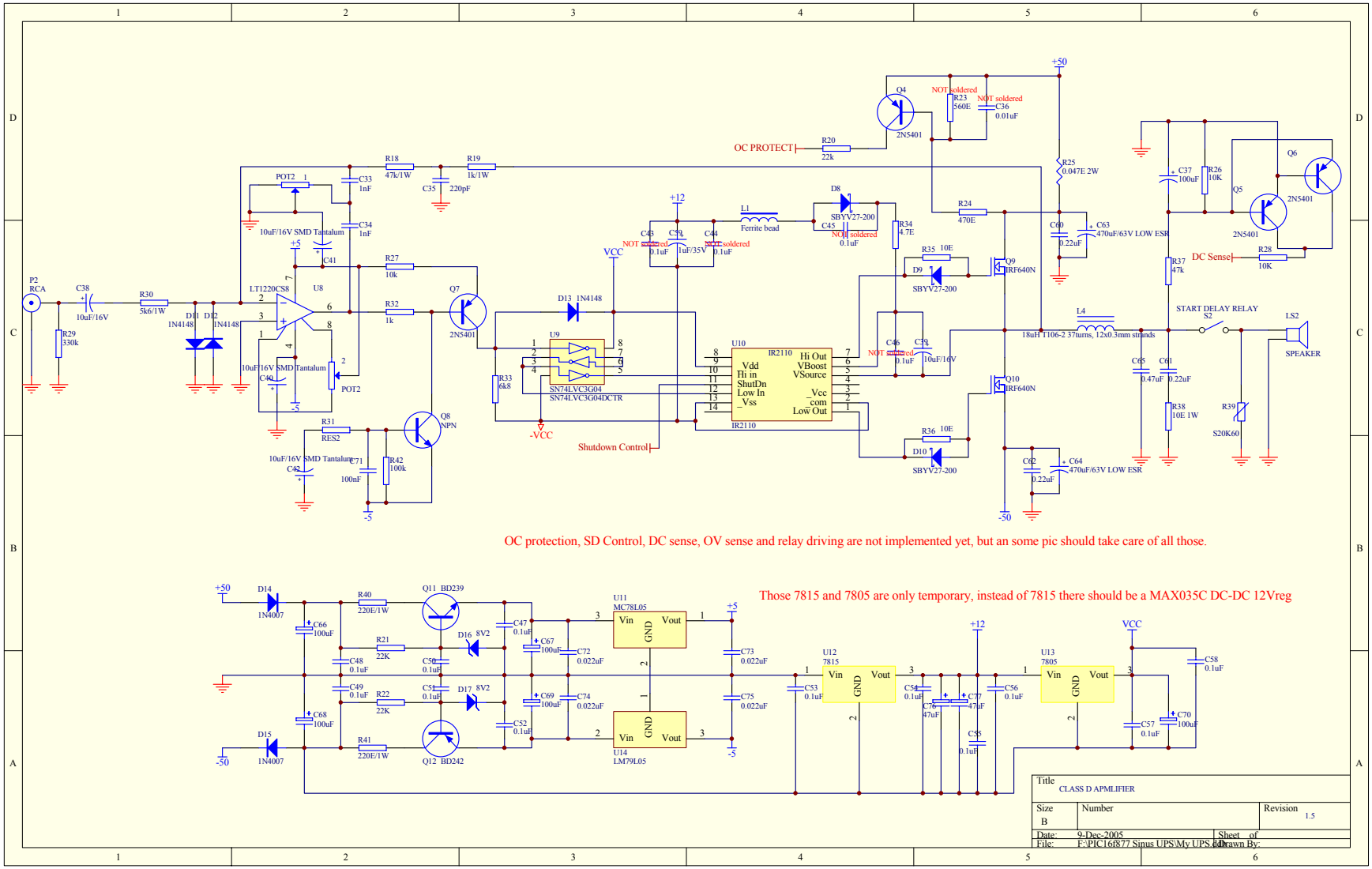
OC PROTECT
DC Sense
Shutdown Control
START DELAY RELAY
SPEAKER
OC protection, SD Control, DC sense, OV sense and relay driving are not implemented yet, but an some pic should take care of all those.
Those 7815 and 7805 are only temporary, instead of 7815 there should be a MAX035C DC-DC 12Vreg
Title
CLASS D APMLIFIER
Size
B
Number
Revision
1.5
Date: 9-Dec-2005
Sheet of
File: E:\PIC16f877 Sinus UPS\My UPS.Drawn By: