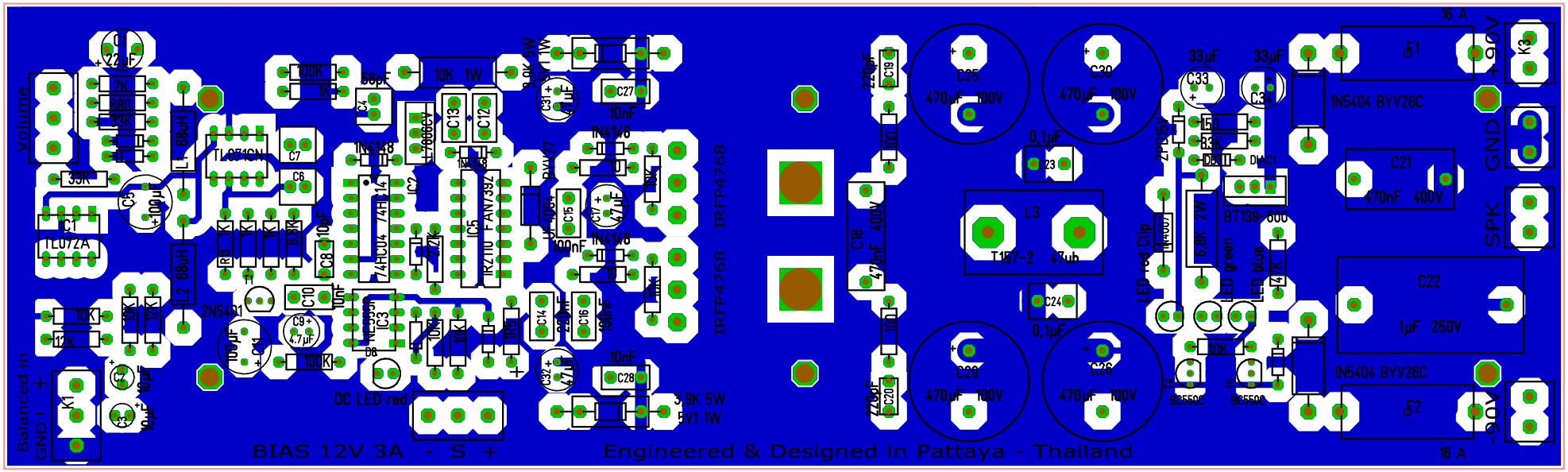
BIAS 12V 3A - S +
Engineered & Designed in Pattaya - Thailand
Balanced in
GND
Volume
IRFP4768
IRFP4768
OC LED red
LED red Clip
LED green
LED blue
1N5404 BYV26C
1N5404 BYV26C
T157-2 47uh
BT139-600
470µF 100V
470µF 100V
470µF 100V
470µF 100V
470µF 100V
470µF 100V
470nF 400V
1µF 250V
16 A
16 A
+90V
-90V
GND
SPK