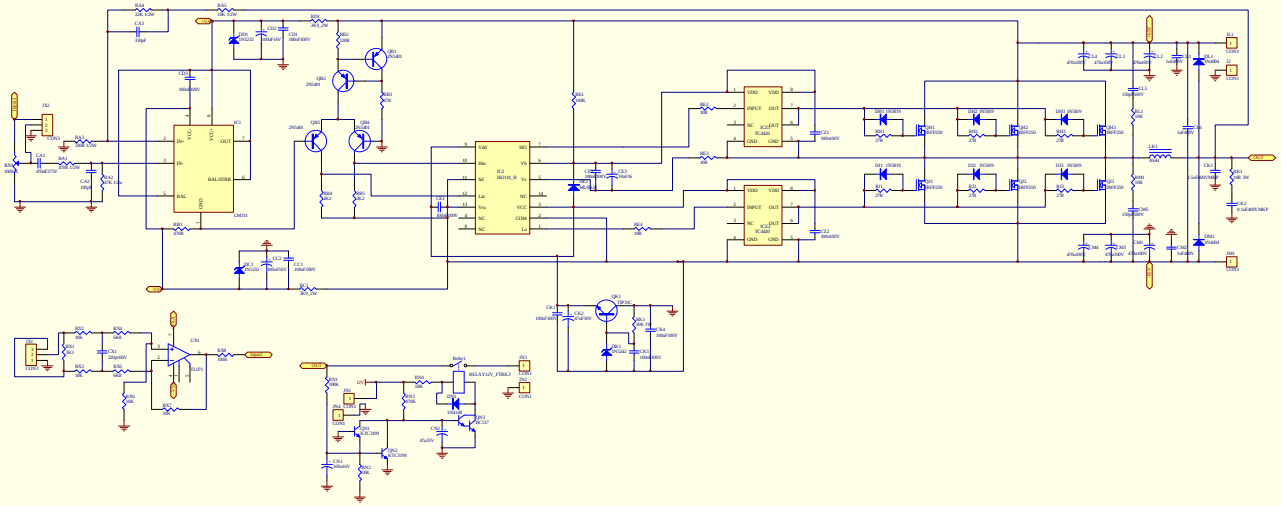
IC2
IR2110_B
LM311
RELAY12V_FTR8C3
TIP142
TIP147
BC547
2N5401
2N5403
IRFP250
LR1
Title
Size
A1
Number
Revision
Date: 29-Jul-2010
File: D:\Public Projects\Power Amp\Power Amp.SchDoc
Sheet of
Drawn By: