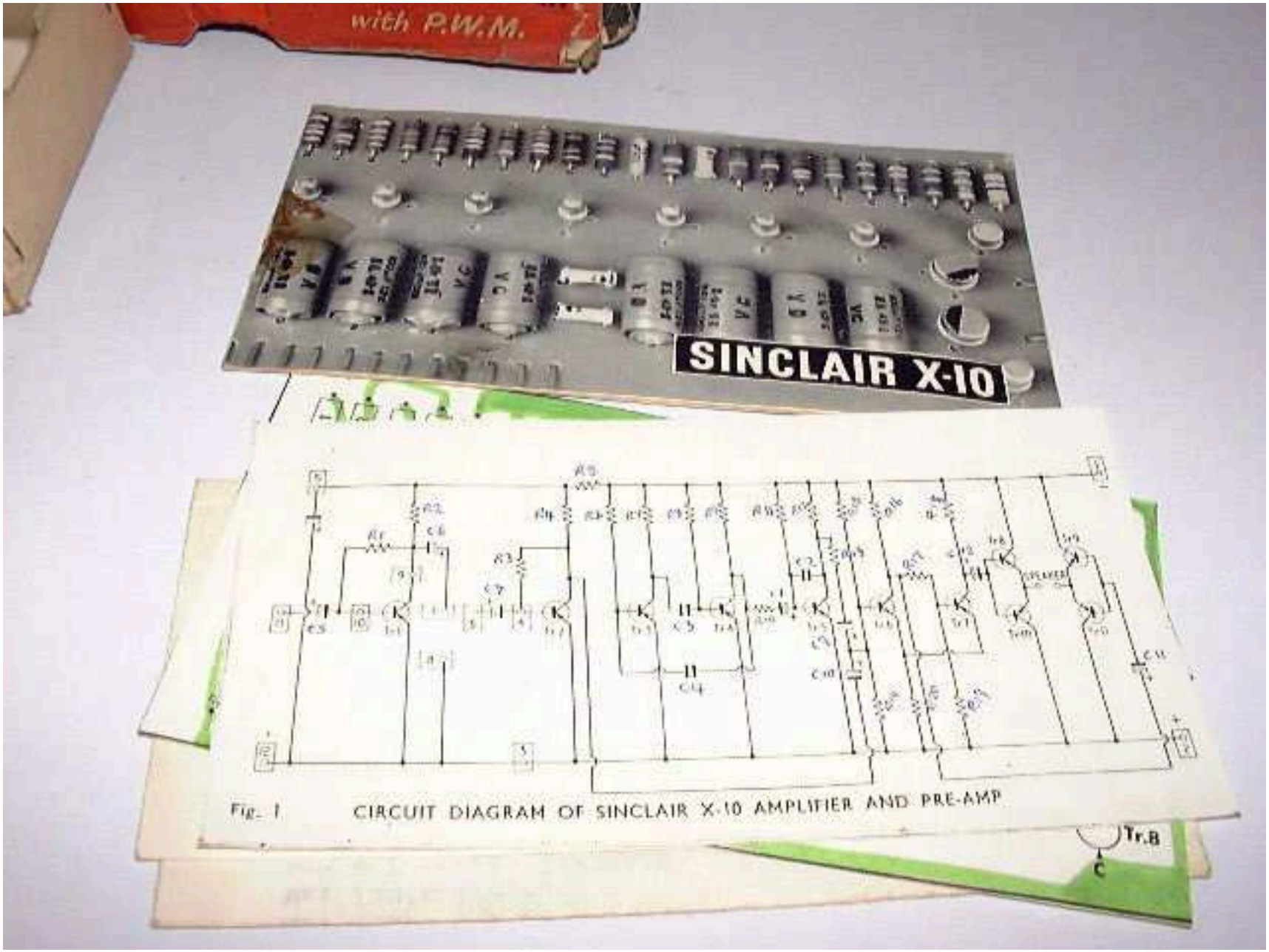
with P.W.M.
SINCLAIR X-10
Fig. 1. CIRCUIT DIAGRAM OF SINCLAIR X-10 AMPLIFIER AND PRE-AMP
Tr.B
C

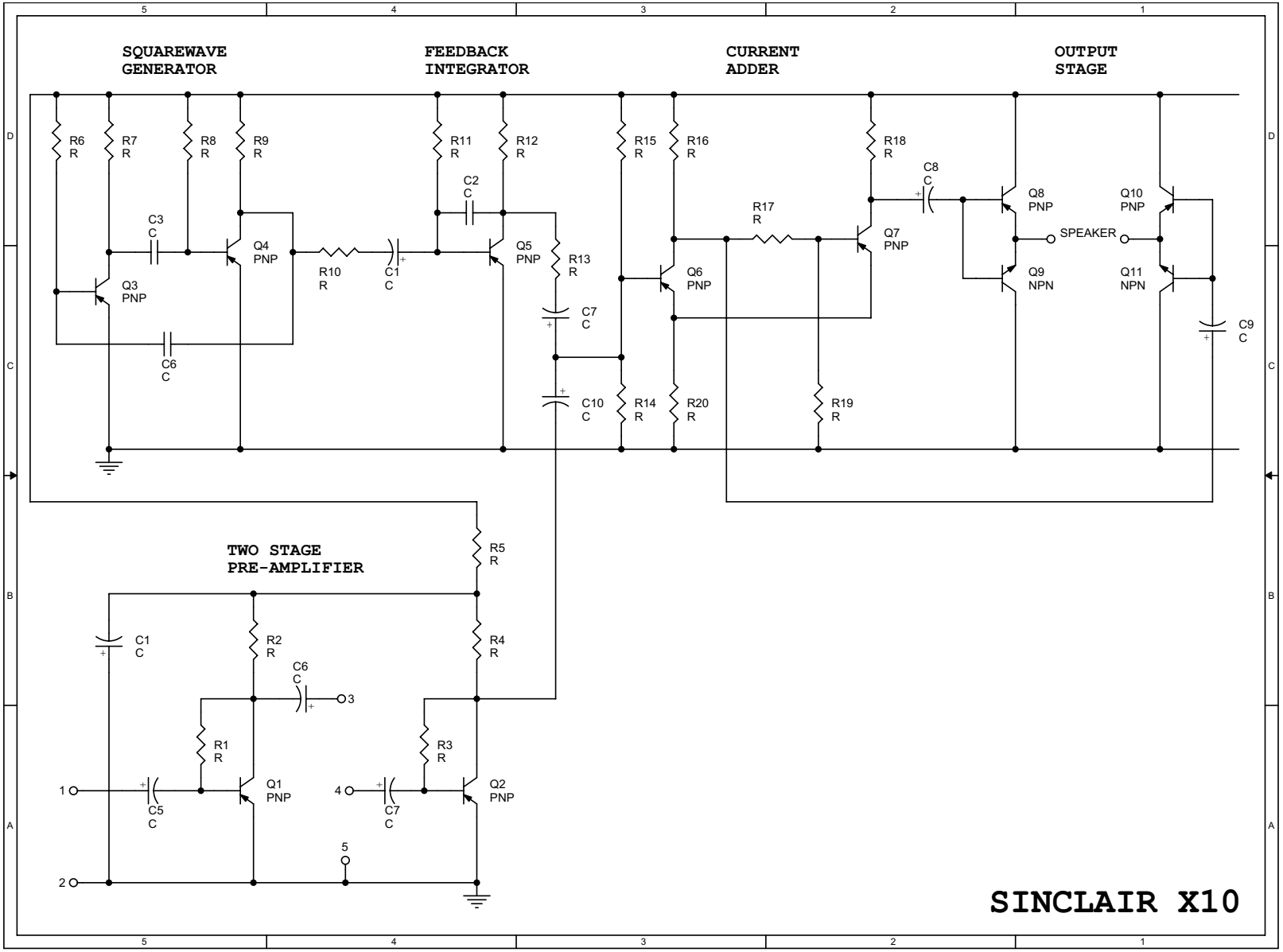
SQUAREWAVE GENERATOR
FEEDBACK INTEGRATOR
CURRENT ADDER
OUTPUT STAGE
R6 R
R7 R
R8 R
R9 R
C3 C
Q4 PNP
Q3 PNP
C6 C
R10 R
C1 C
R11 R
R12 R
C2 C
Q5 PNP
R13 R
C7 C
C10 C
R15 R
R16 R
Q6 PNP
R14 R
R20 R
R17 R
R18 R
C8 C
Q7 PNP
R19 R
Q8 PNP
Q9 NPN
SPEAKER
Q10 PNP
Q11 NPN
C9 C
TWO STAGE PRE-AMPLIFIER
R5 R
C1 C
R2 R
C6 C
3
R1 R
1
C5 C
Q1 PNP
R4 R
R3 R
4
C7 C
Q2 PNP
5
2
SINCLAIR X10