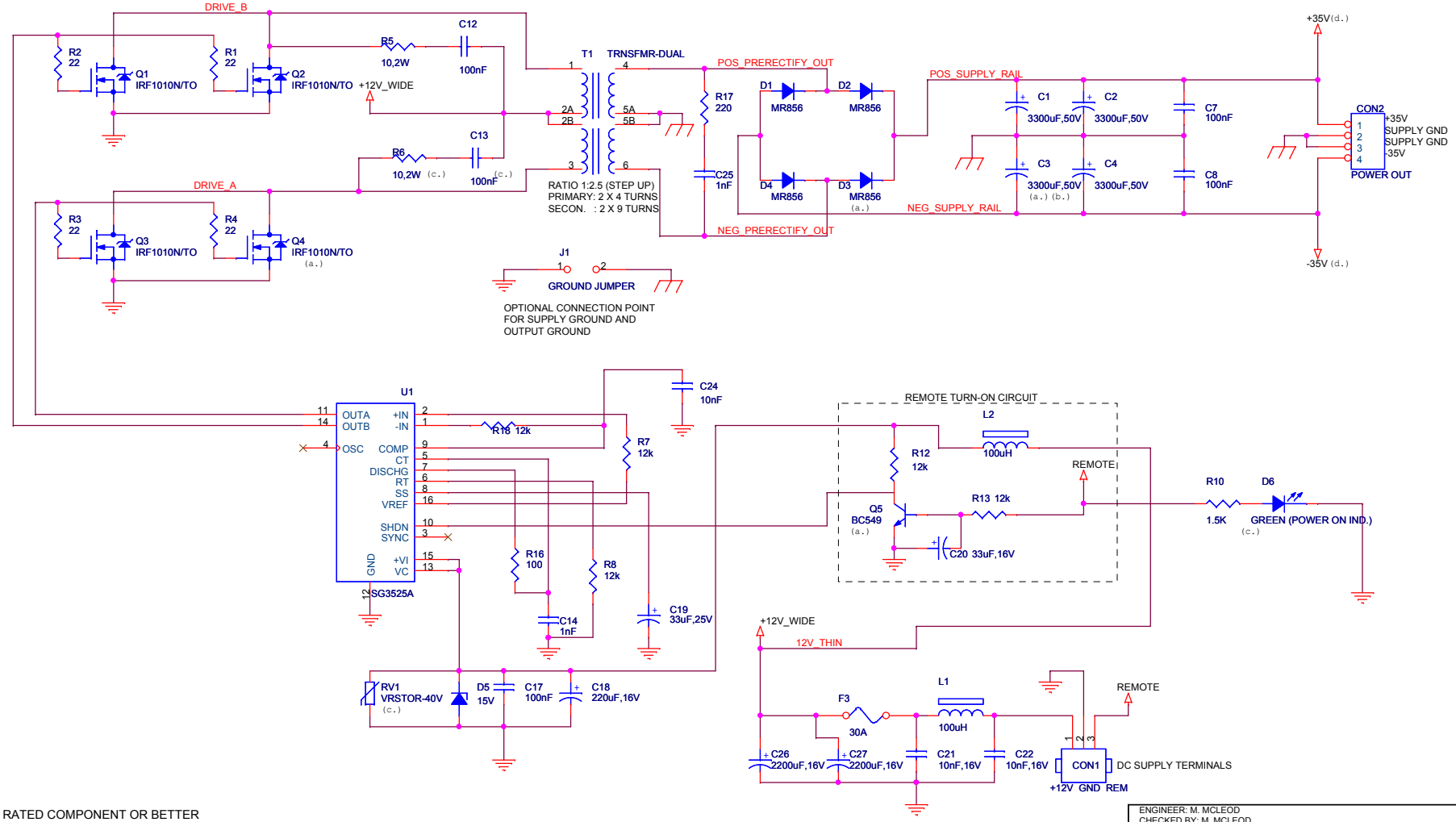

NOTES:
a. USE SIMILARLY RATED COMPONENT OR BETTER
b. FOR GREATER PERFORMANCE, LARGER CAPACITORS OPTIONAL
c. OPTIONAL COMPONENT, NOT REQUIRED
d. OUTPUT VOLTAGE WILL VARY IF TRANSFORMER OR PWM FREQUENCY IS ALTERED

ENGINEER: M. MCLEOD	
CHECKED BY: M. MCLEOD	
Title	SG3525-Based DC-DC Unregulated Switching Power Supply
Size B	Document Number SG3525_DCD_SMPS_SUPPLY.DSN — Rev 1
Date: Saturday, June 23, 2007	Sheet 1 of 1