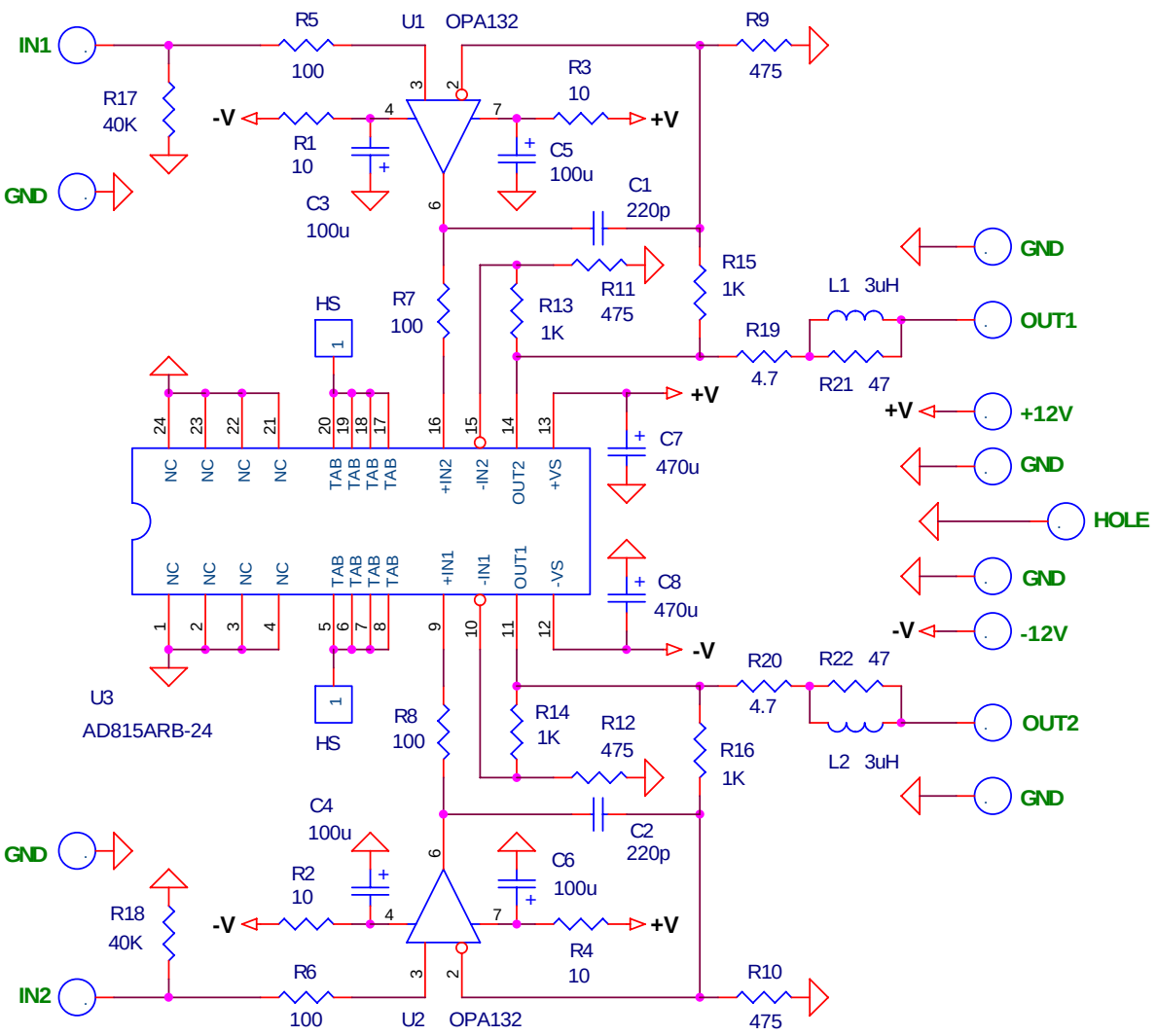

Gain = 1 + R15(R16) / R9(R10) = +10dB / x3 /

C1,C2 value is depended of the U1,U2 type

U1,U2 recommended types:
OPA132, OPA134, OPA627

Literature:

1. Burr-Brown, AB-007A Application Bulletin.
2. Walt Jung, Composite Line Driver With Low Distortion.

Last Rev. : June 2006

AM-1 : AD815 Based Amplification Module / Headphone Driver				
© Vitaly Ovseitsev	File AM-1.DSN	Rev B	Size A4	Sheet 1 of 1