DEFINE

Low Pass Section

R1 (k)	8.2	Calc = F1	38.818279
C1 (nf)	1000		

High Pass Section

R2 (k)	33	Calc = F2	241.14385
C2 (nf)	20		

Gain

R3 (k)	15	Calc = G1	0.9146341
		Calc = G2	0.4545455
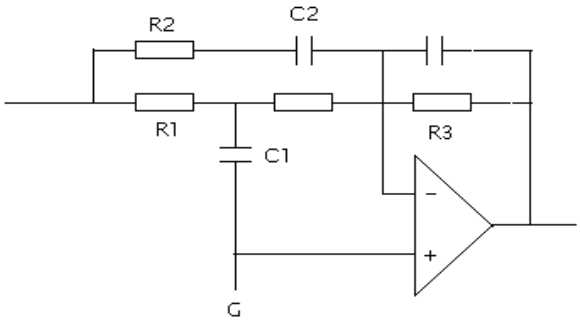
Calc = F3	78.109951	Notch Ok
Calc = F4	137.24334