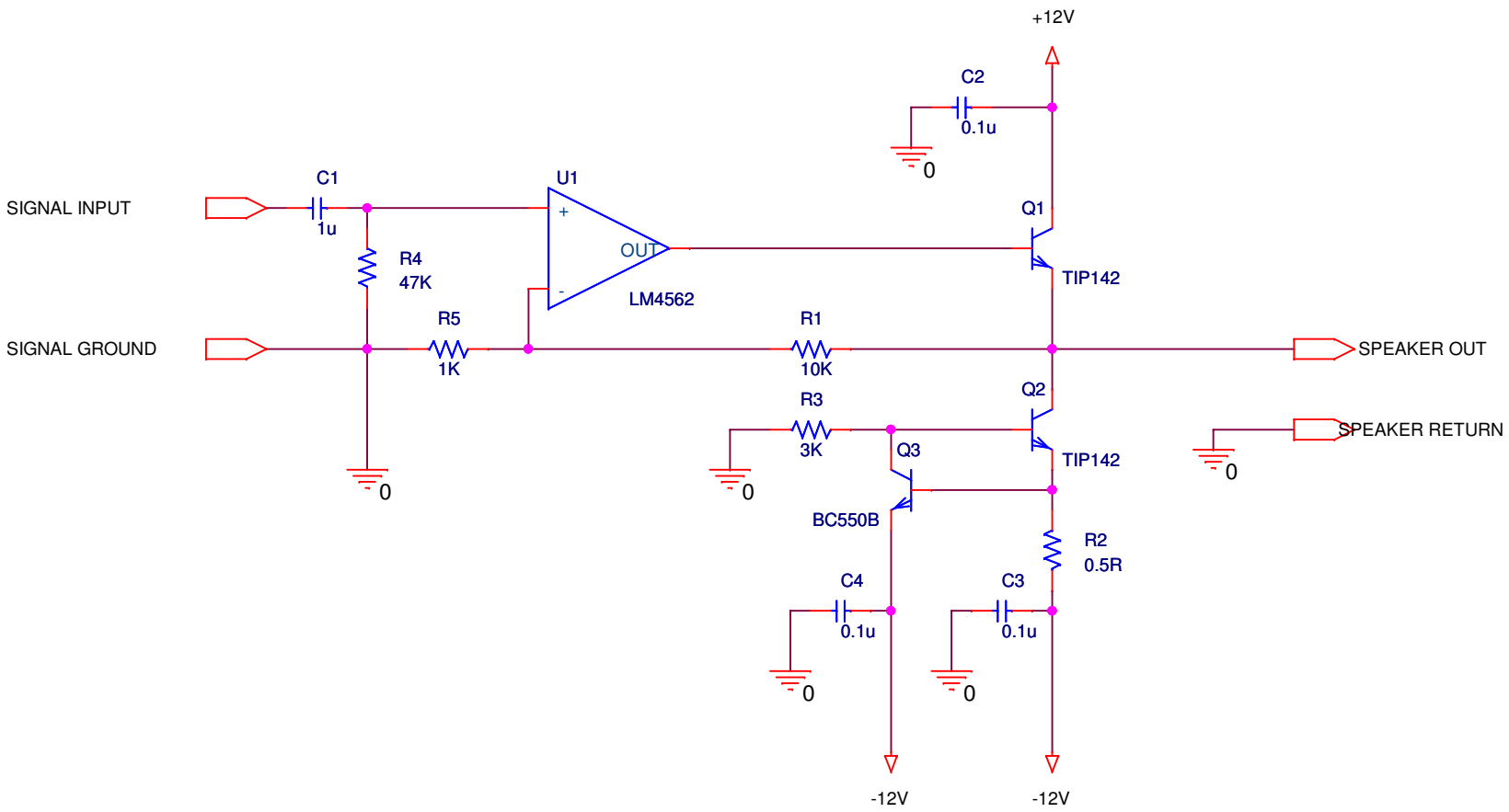

Title	Class A chipamp	
Size A	Document Number Designed by ionomolo in manresa	Rev <RevCode>
Date: Thursday, February 15, 2001	Sheet 1 of 1	