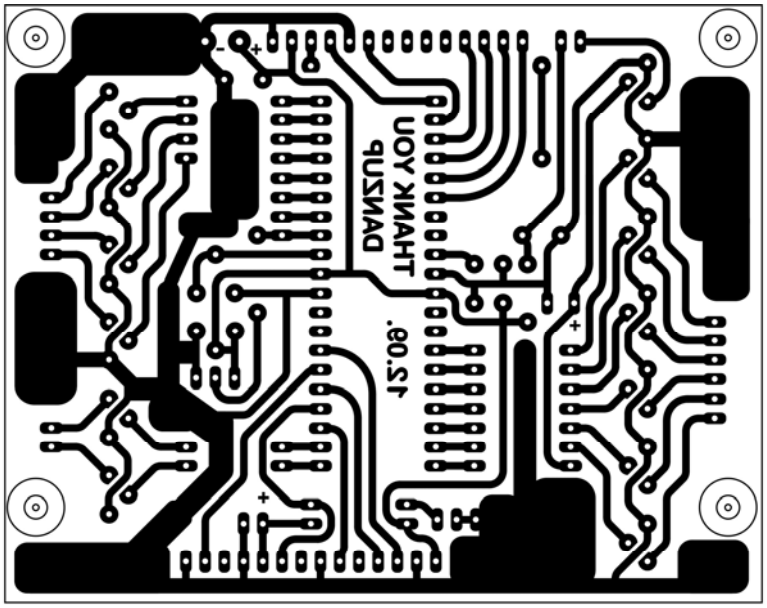

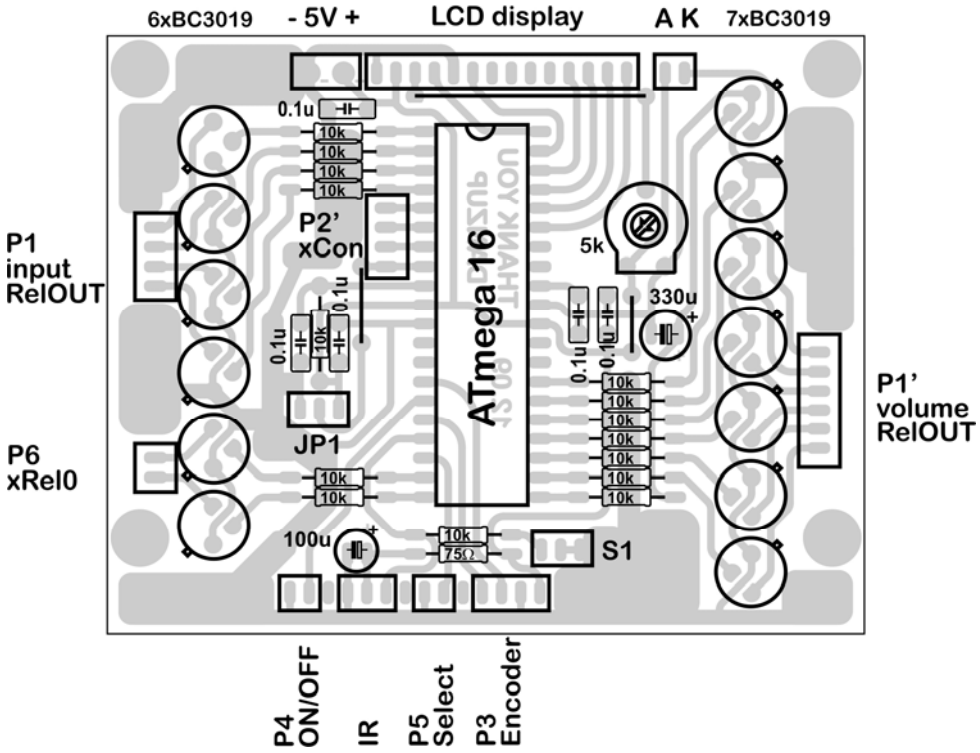
6xBC3019
- 5V +
LCD display
A K
7xBC3019
P1
input
RelOUT
P6
xRel0
P2'
xCon
JP1
ATmega16
5k
330u
P1'
volume
RelOUT
100u
S1
P4
ON/OFF
IR
P5
Select
P3
Encoder