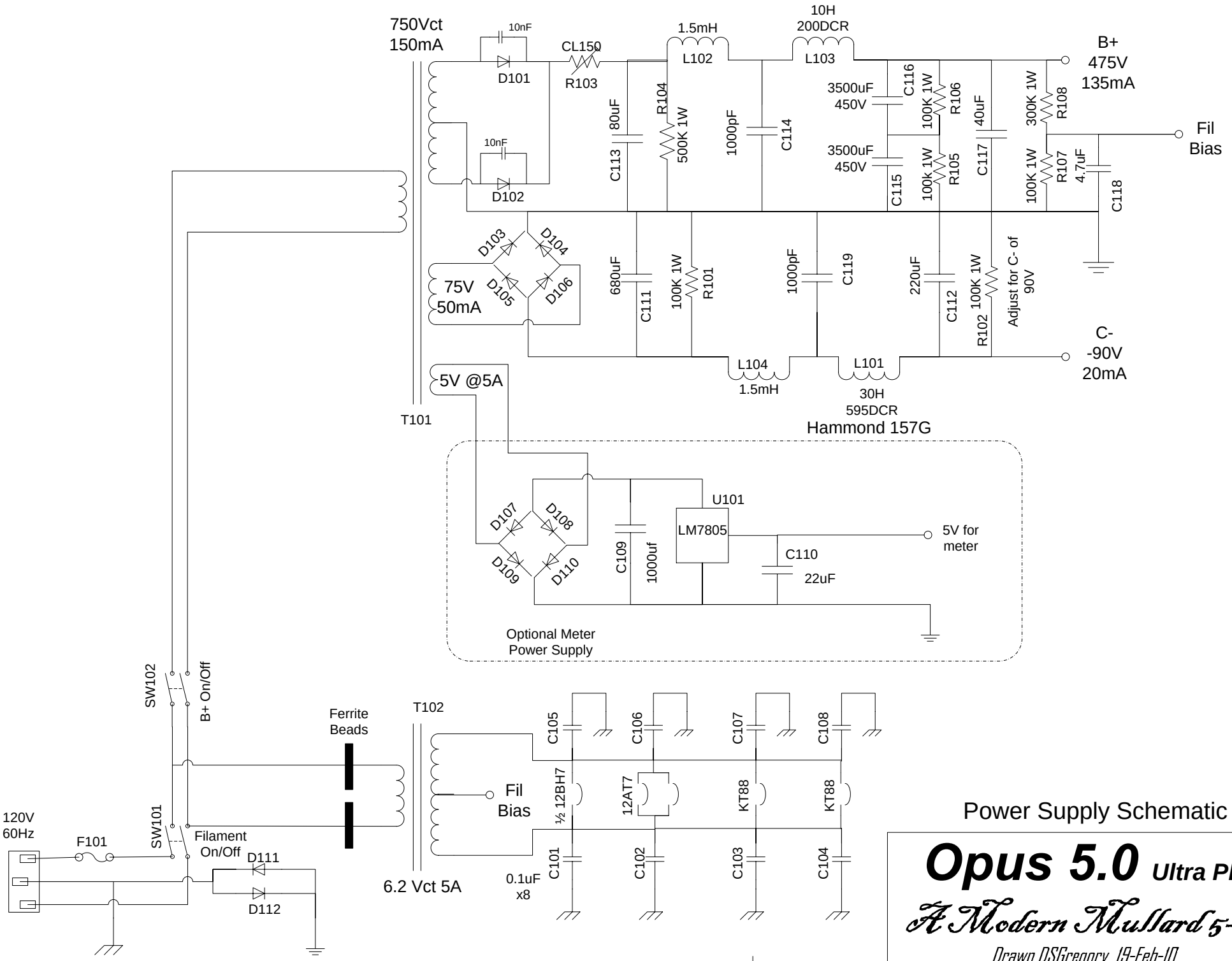

Power Supply Schematic

Opus 5.0 Ultra PP

A Modern Mullard 5-20

Drawn DSGregory 19-Feb-10

Design DSGregory and DIY Friends