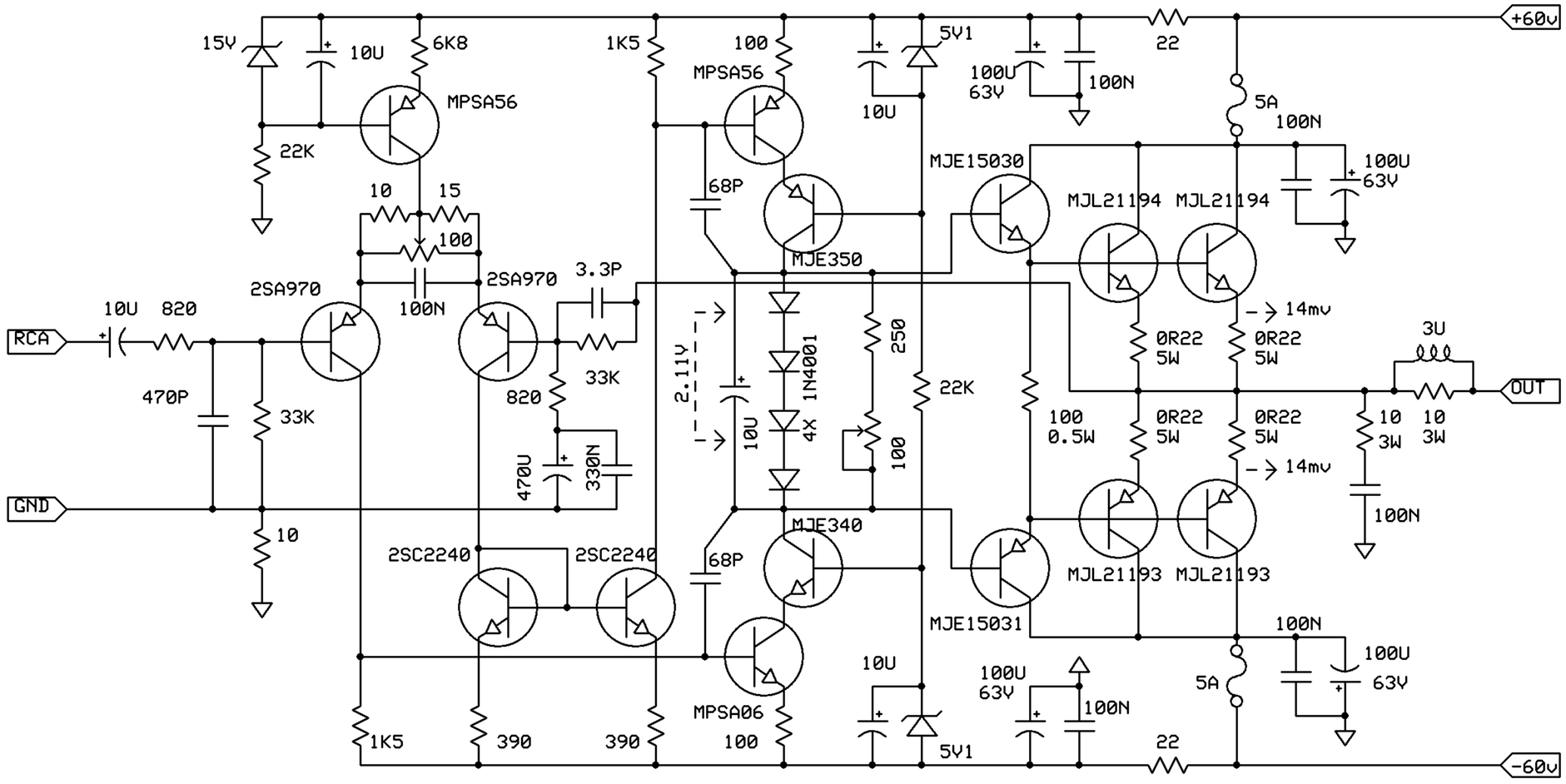

Y-LAB		
YA200		
Veysel ARSLAN	Rev 1.0 10.02.2009	

tdh results at 70w (4ohm load) :

1khz % 0.008
10khz % 0.012
20khz % 0.02

bias :
ltp 2.1ma
vas 7.2ma
driver 12ma
power transistors 65ma per pair