UCD-MINIONINA v.2 All Discrete Class D Amplifier

Kartino Surodipo @ Facebook
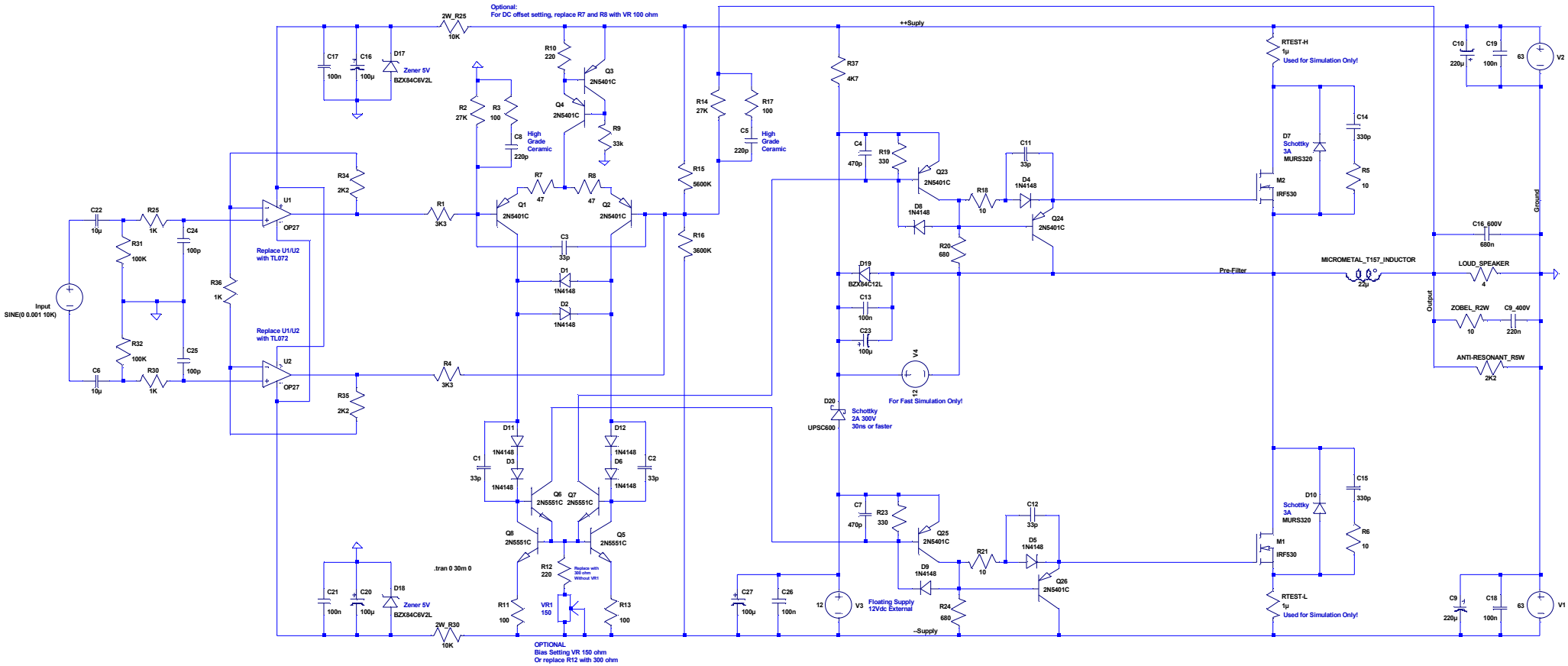
Designed June 2015