1KHz Twin-T Notch Filter

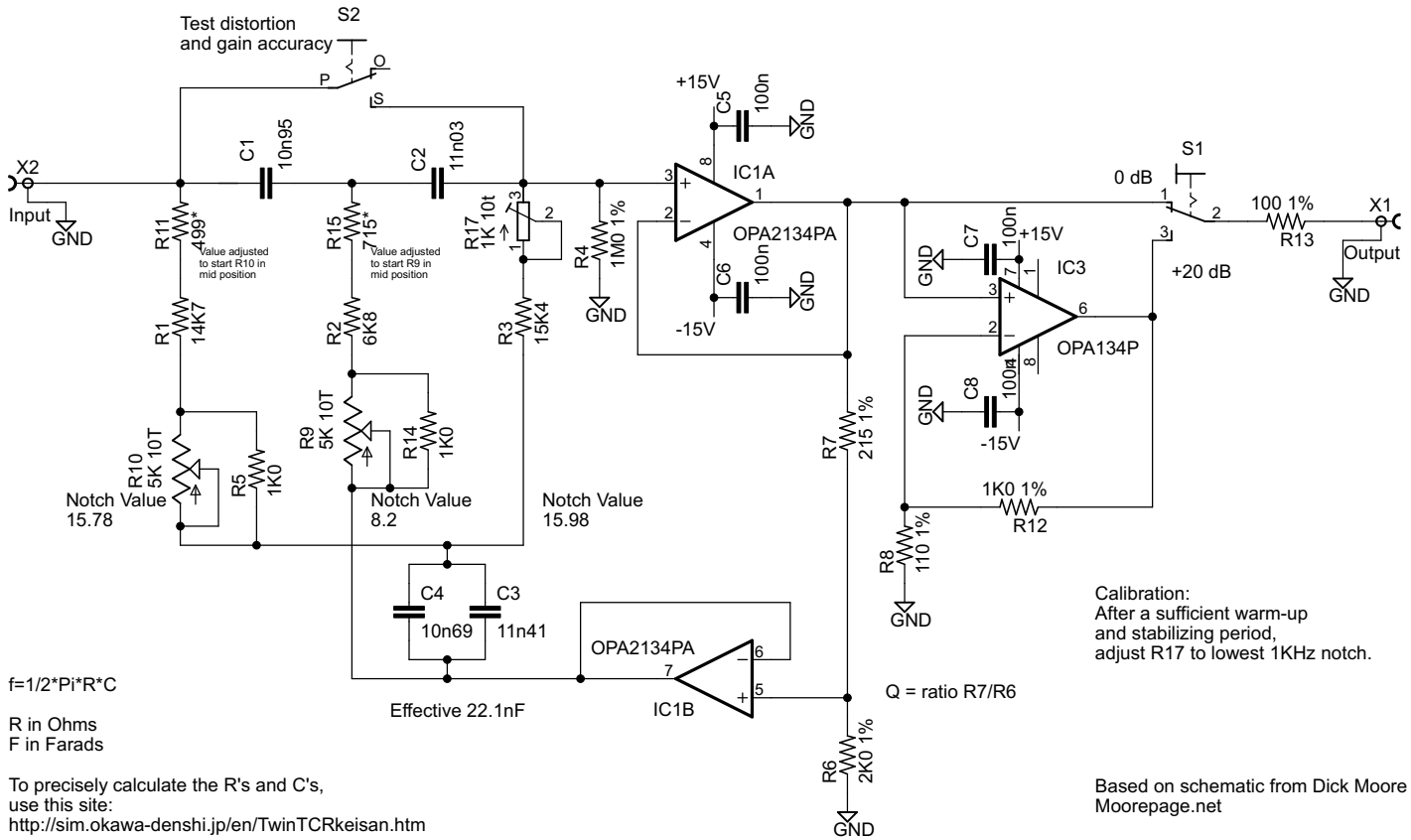

12-3-2014 10:32:07 F:\My Documents\eagle\Audio Analyzer\Twin-T Filter.sch (Sheet: 1/1)