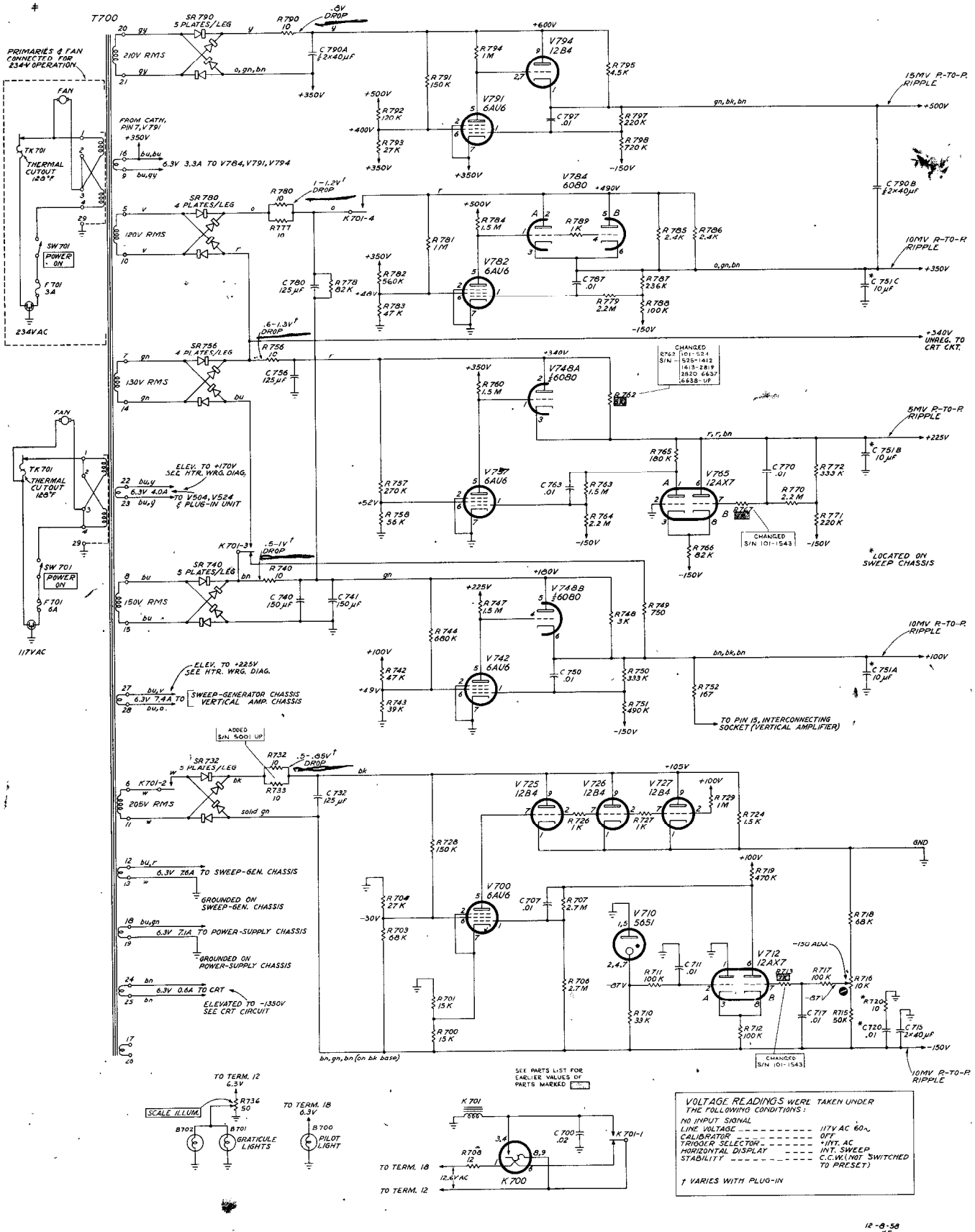

AA

LV POWER SUPPLY

12-8-58 KF