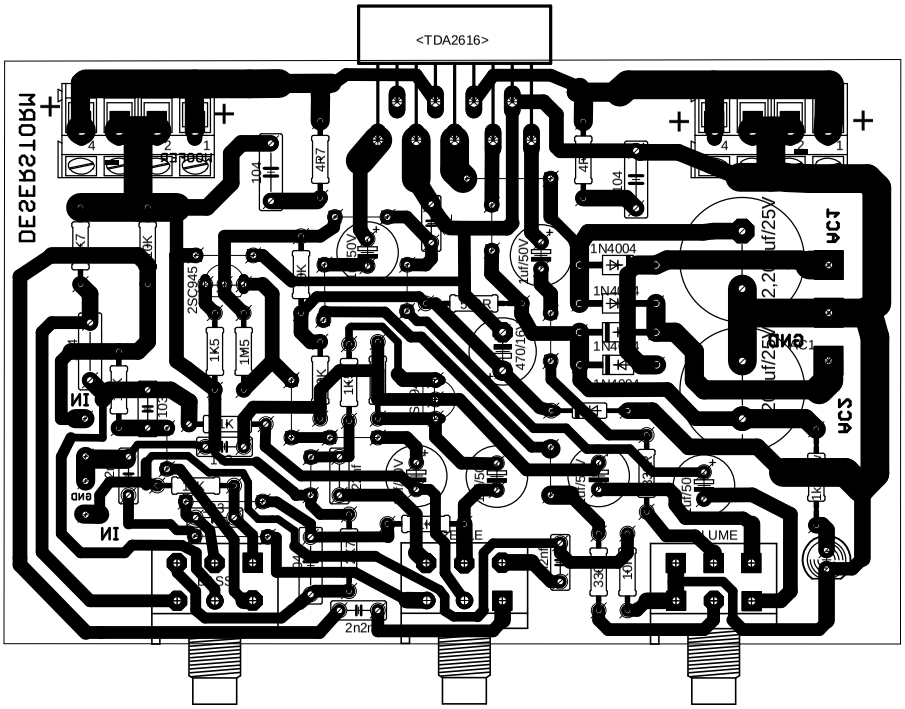
DESESTORM
<TDA2616>
VCC
GND
IN
2SC945
1K5
1M5
4R7
104
1N4004
2,2uf/25V
47/016
2n2
VOLUME

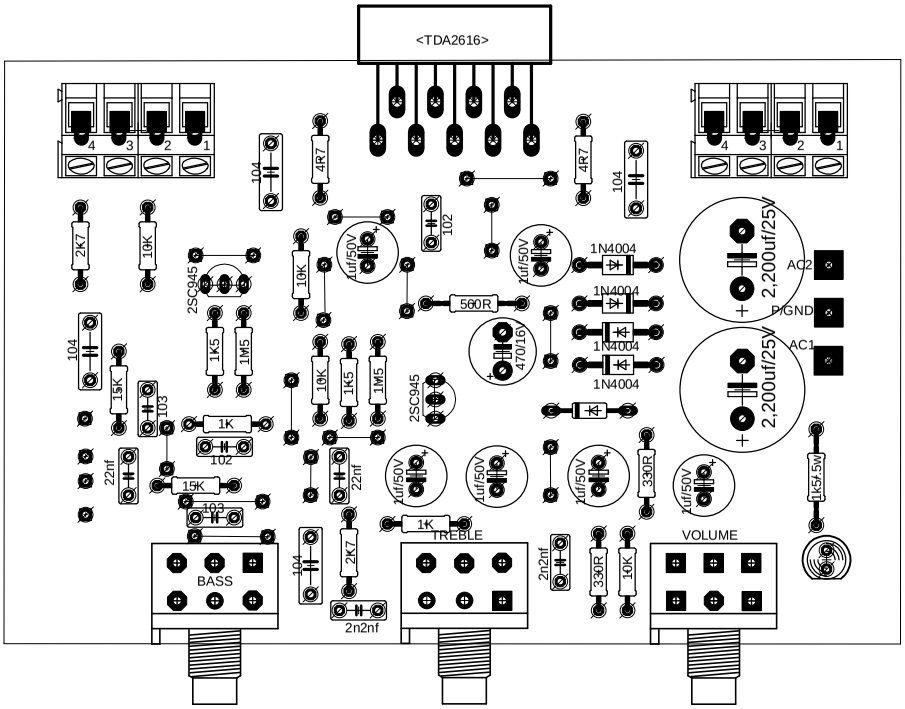
<TDA2616>
4
3
2
1
104
4R7
102
2K7
10K
2SC945
1K5
1M5
1uf/50V
560R
470/16V
1N4004
2,200uf/25V
AC2
P/GND
AC1
15K
103
1K
22nf
BASS
TREBLE
VOLUME
2n2nf
330R
1K5/5W

MOTORSPEED
MODER
IN1
GND
IN1
GND
AC2
AC1
+
-
+
-
+
-