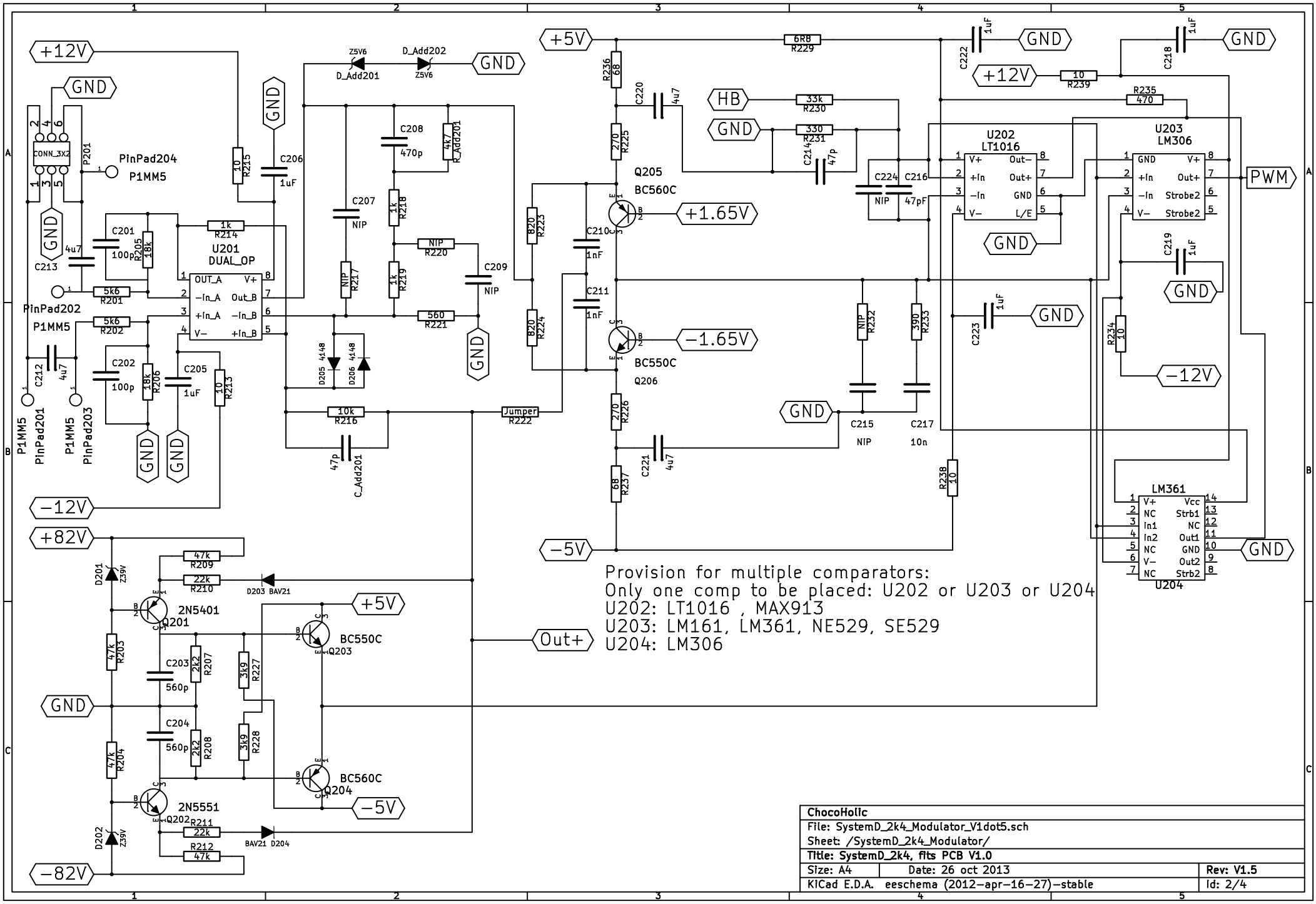

Provision for multiple comparators:
Only one comp to be placed: U202 or U203 or U204
U202: LT1016 , MAX913
U203: LM161, LM361, NE529, SE529
U204: LM306

ChocoHolic		
File: SystemD_2k4_Modulator_V1dot5.sch		
Sheet: /SystemD_2k4_Modulator/		
Title: SystemD_2k4, fits PCB V1.0		
Size: A4	Date: 26 oct 2013	Rev: V1.5
KiCad E.D.A. eeschema (2012-apr-16-27)-stable		Id: 2/4