```
;include Cordell-Models.txt

.MODEL J111 NJF(VTO=-5.3638 BETA=3.25000m BETATCE=-0.5 LAMBDA=2.00000E-2 RD=2.42642 RS=2.42642 CGS=1.10000E-11 CGD=1.30000E-11 PB=7.01712E-1 IS=2.17605f XTI=3 AF=1 FC=0.5 N=1 NR=2 MFG=PHILIPS)

.MODEL 2SK369BL NJF (VTO=-490M BETA=42M LAMBDA=1M IS=10F CGD=36.6561P
+ CGS=60.0451P PB=1.99682 KF=0.001F AF=500M )

.model J2sk170 NJF(Beta=36m Rs=4.151 Rd=4.151 Betatce=-.5 Lambda=1.923m
+ Vto=-.5024 Vtotc=-2.5m Cgd=20p M=.3805 Pb=.4746 Fc=.5
+ Cgs=30p Isr=84.77p Nr=2 Is=8.477p N=1 Xti=3 Alpha=10u Vk=100
+ Kf=111.3E-18 Af=1)

.include models_3306.txt

.include MYamp.txt

;include RC-MODELS EVO1.txt

;include library.txt

.inc je990.mod
.inc MJE172.mod
.inc MJE182.mod
.inc 1N914B.mod

.options plotwinsize=0
.options numdgt=7

.param Freq=1k
.param numcyc=10
.param dlycyc=0.1
.param FFT=2**15
.param simtime=(dlycyc+numcyc)/Freq
.param dlytime=dlycyc/Freq
.param numsampl=simtime/Freq/((simtime/numcyc)*FFT)
.four {Freq} V(Vin) V(Vout)

.tran 0 {simtime} {dlytime} {numsampl}

.param Vin 1.2

;ac dec 10 1 100meg

*DN2540-Tjp VDMOS with subthreshold (c) Ian Hegglun Aug 2015
.model DN2540-Tjp VDMOS (Rg=1 Vto={-1.52-4.5m*(Tjp-25)} Lambda=6m
+ Rs={0.35*(1+3m*(Tjp-25))} Kp={800m/(1+6m*(Tjp-25))}
+ Ksubthres={0.11} Mtriode={0.35} Rd={6*(1+3m*(Tjp-25))}
+ Cgdmax=10p Cgdmin=1p a=0.25 Cgs=100p Cjo=200p
+ m=0.7 VJ=2.5 IS=4.0E-8 N=2.4 Rb=10 )

.param Tjp=50

* LSK389C      November 29, 2010
.MODEL LSK389C NJF BETA=0.035 VTO=-0.54 LAMBDA=5.0E-3
+ IS=3E-14 N= 1 RD=8 RS=7 CGD=5E-11 CGS=5E-11
+ PB=1.2 FC=0.5 KF=0 AF=1

.param RFB 10k
```

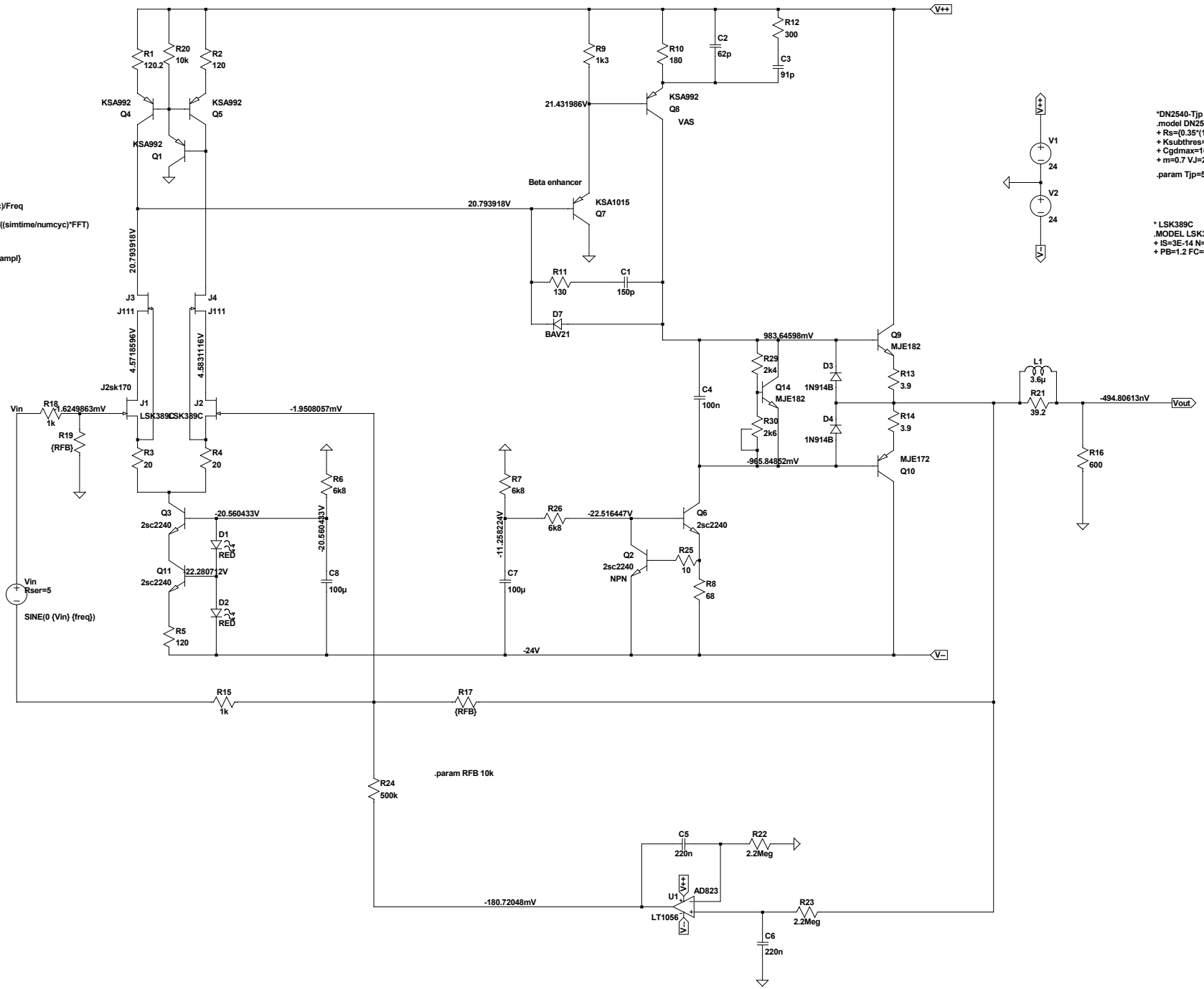

--- C:\Users\Ricardo\LT SPICE RC\DISCRETE OPAMP\JE990OPA EVO10 VAS DARLINGTON TO GND OP.asc ---