If not marked specifically:
- all resistors are metal film 1 %
- resistors power 0,6 W
- capacitors 100 V
- all ELCO are Nichicon Fine Gold
- LED RED size 2 x 5 mm
- dashed line connected parts are thermally coupled
- 220 Ohm trimmers sets DC offset & Iq bias
  (start both trimmers with maximal resistance)

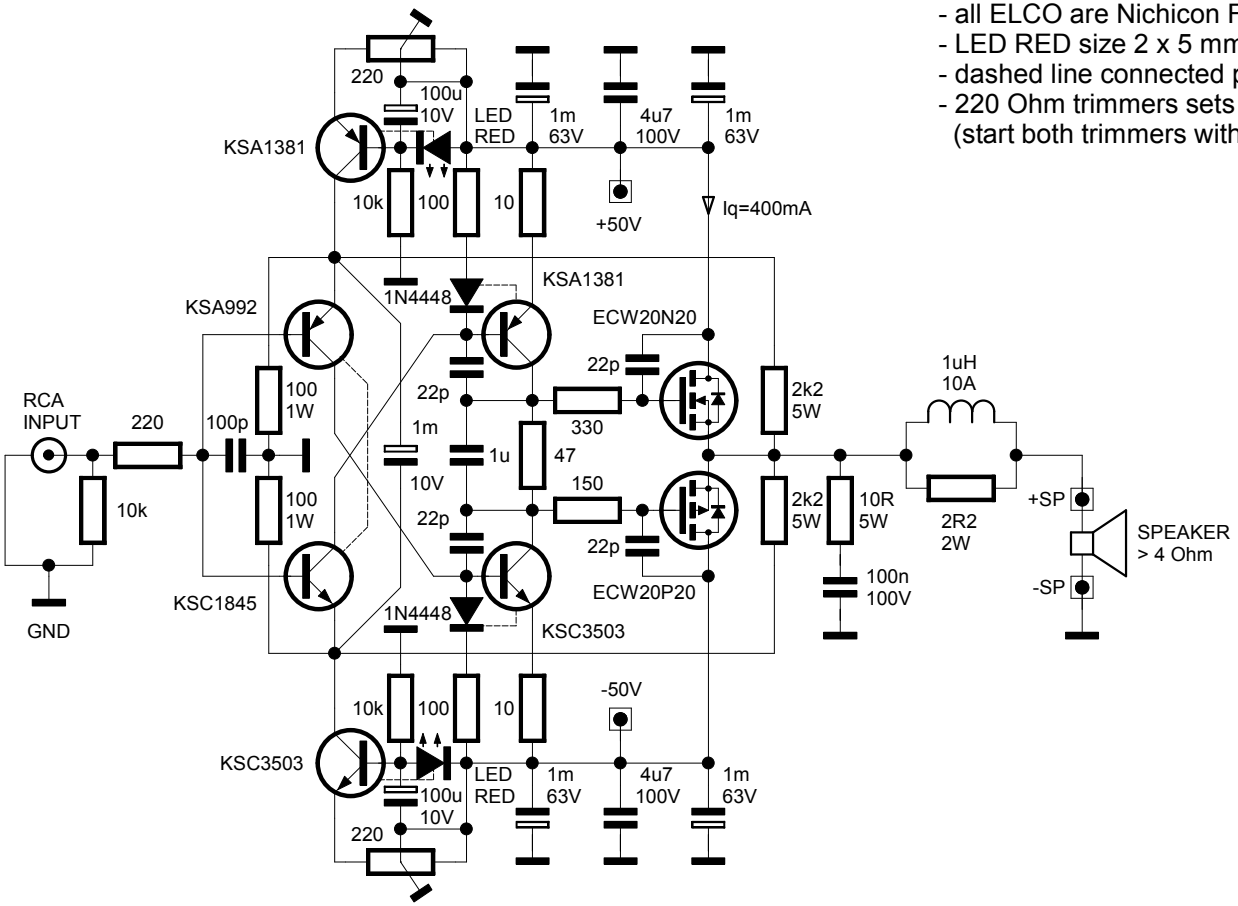

Title	SSA Power Amp	
Size A4	Number ESL 0818	Rev 1.7
Date 12.08.2018		Drawn by A. Lakner
Filename SSA Power Amp		Sheet 1 of 1