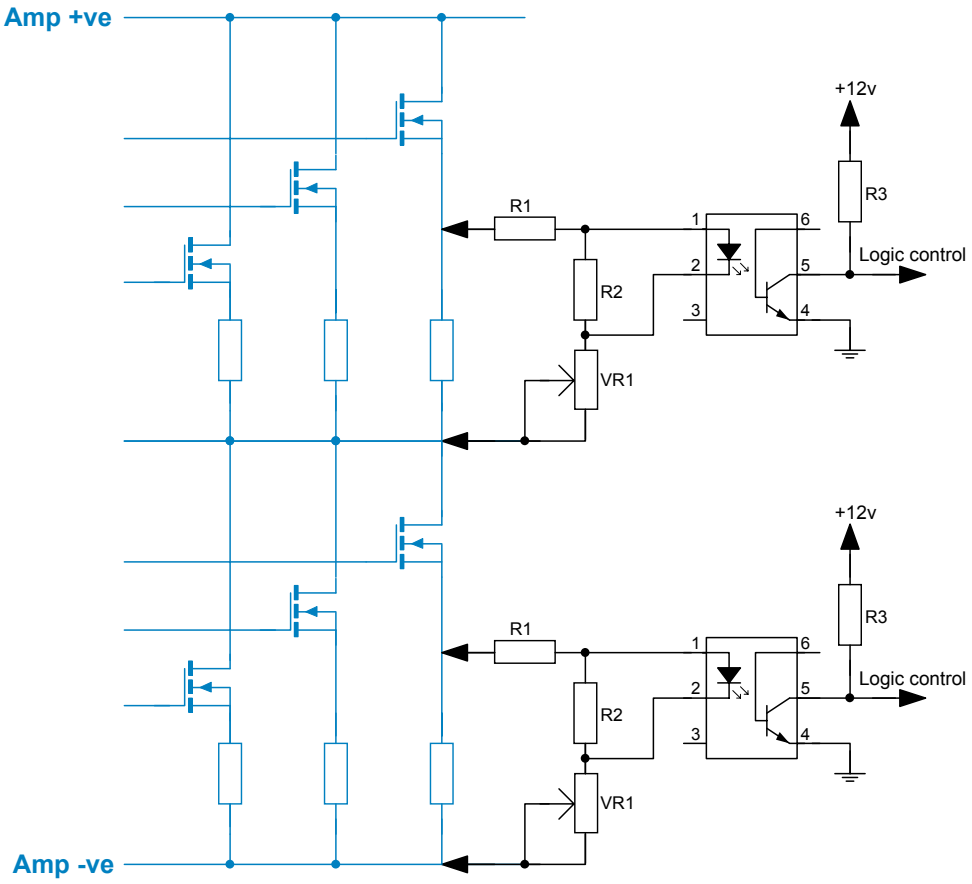Short cct detection