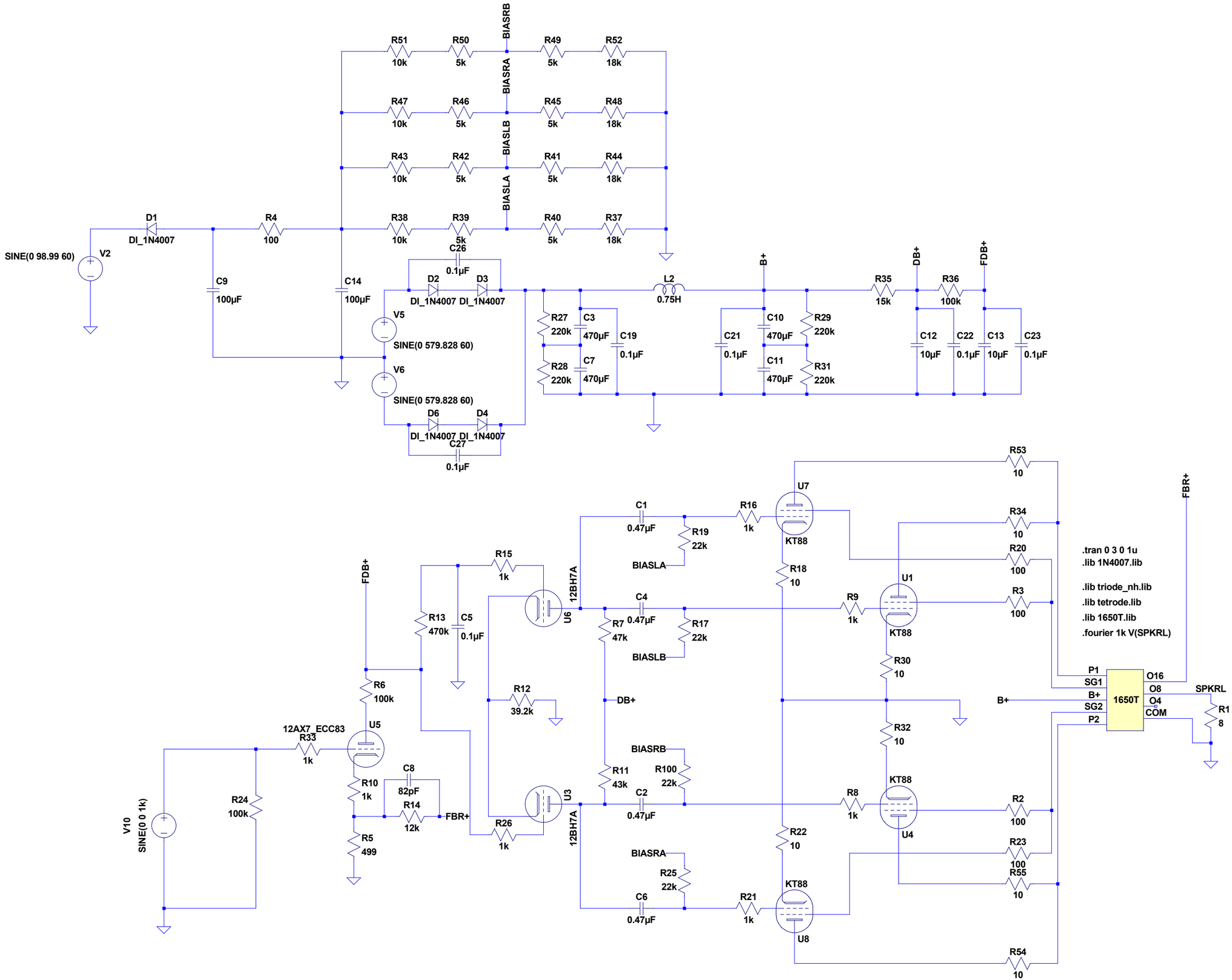

--- E:\Documents\Electronics Projects\BRS-120A Rev. 3\Simulation\Quad.asc ---