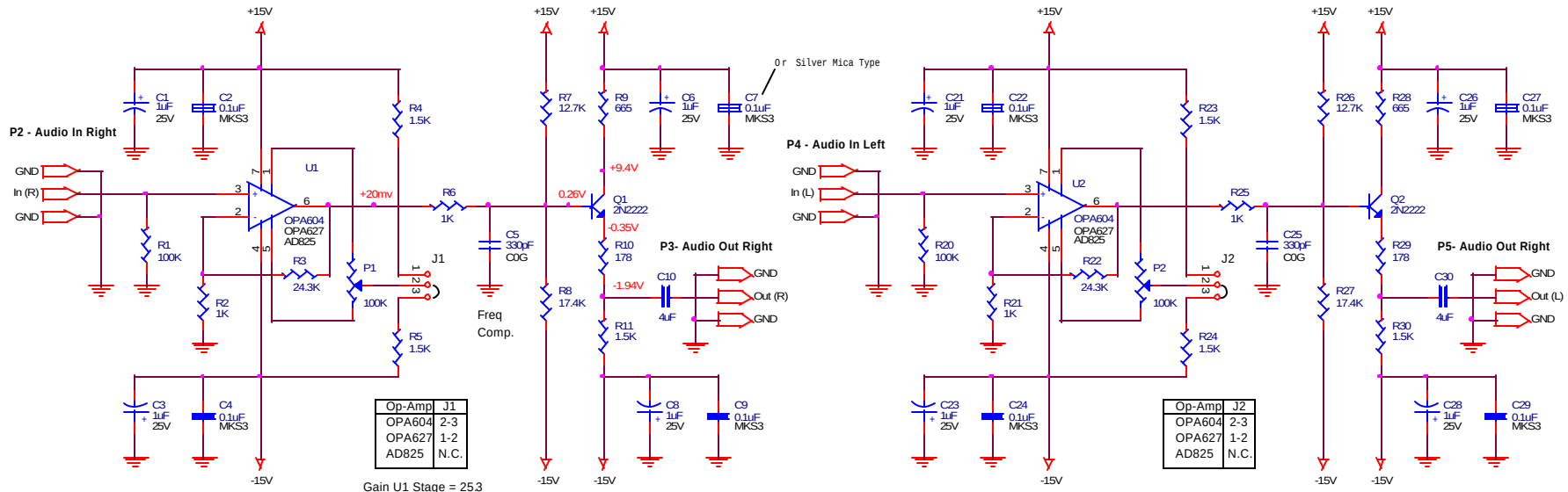

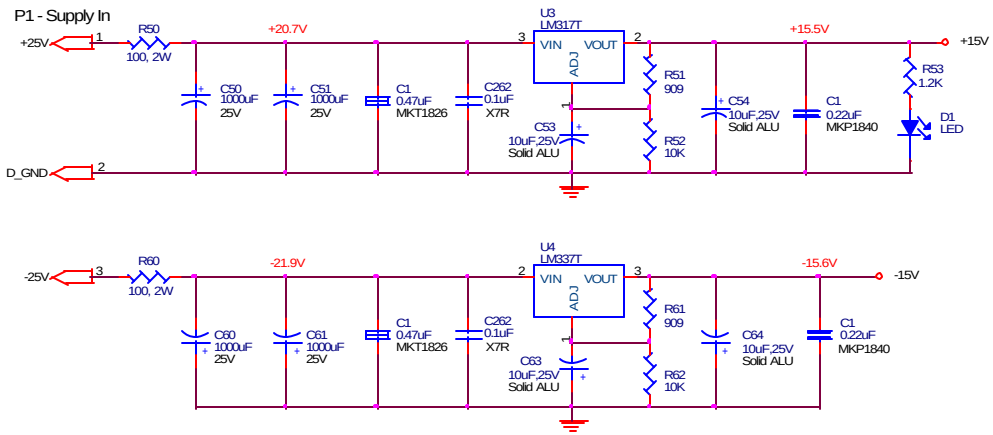

Capacitor Types

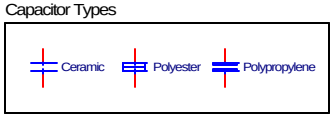

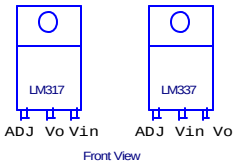

Notes:
1- All resistors MF, 1%, 1/4W, SMT, otherwise noted
2- All capacitors ceramic, otherwise noted

Liste des révisions	
No	Description
1	
2	
3	
4	

Title	Audio Tune DAC
	Tube DAC-1
Size B	Document Number: Line Stage Class-A Op-Amp
Rev	1.2
Date:	Tuesday, May 13, 2003
Sheet	4 of 4