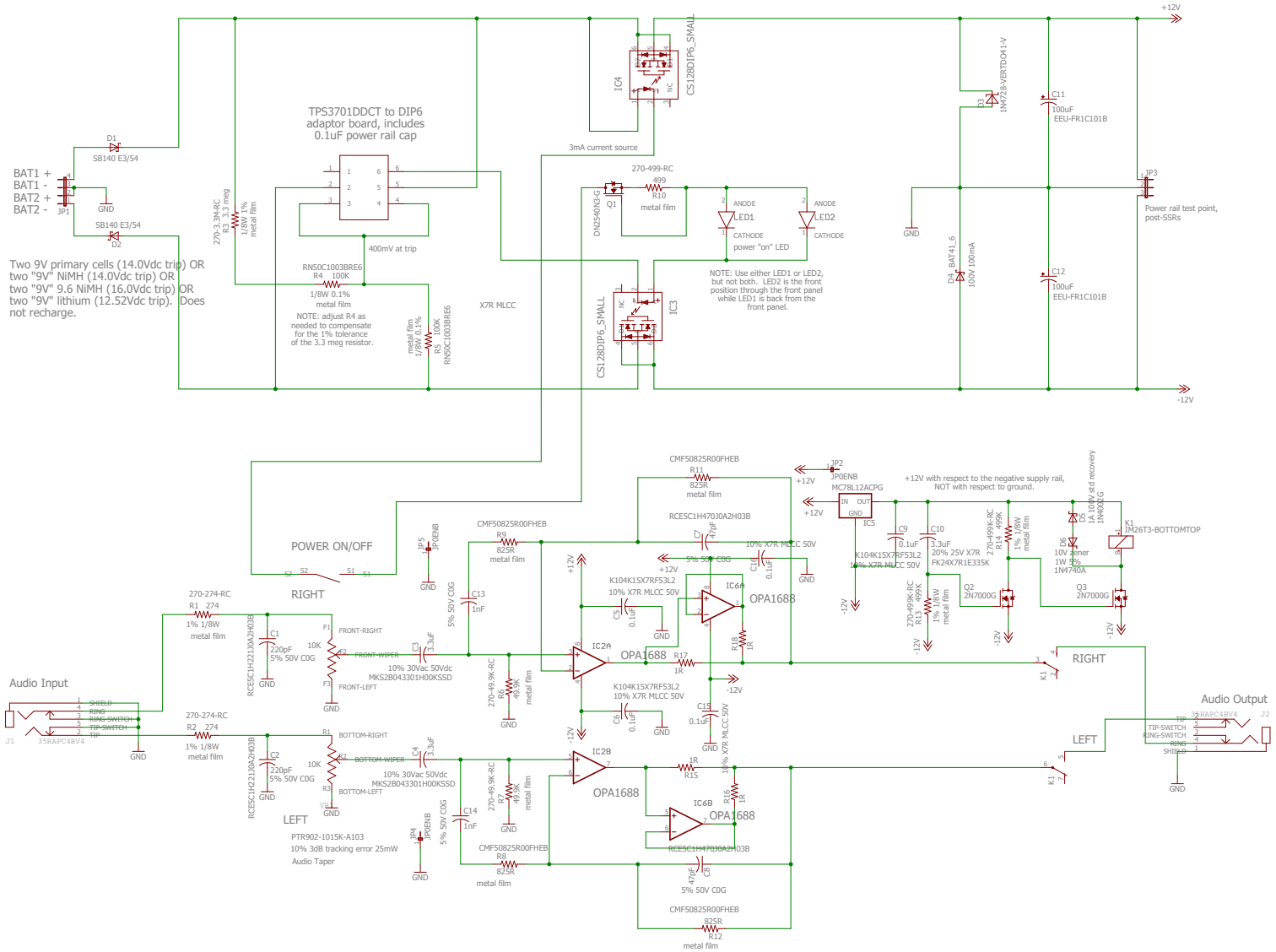OPA1688 Parallel Super CMOY V1.0
agdr Audio 2016