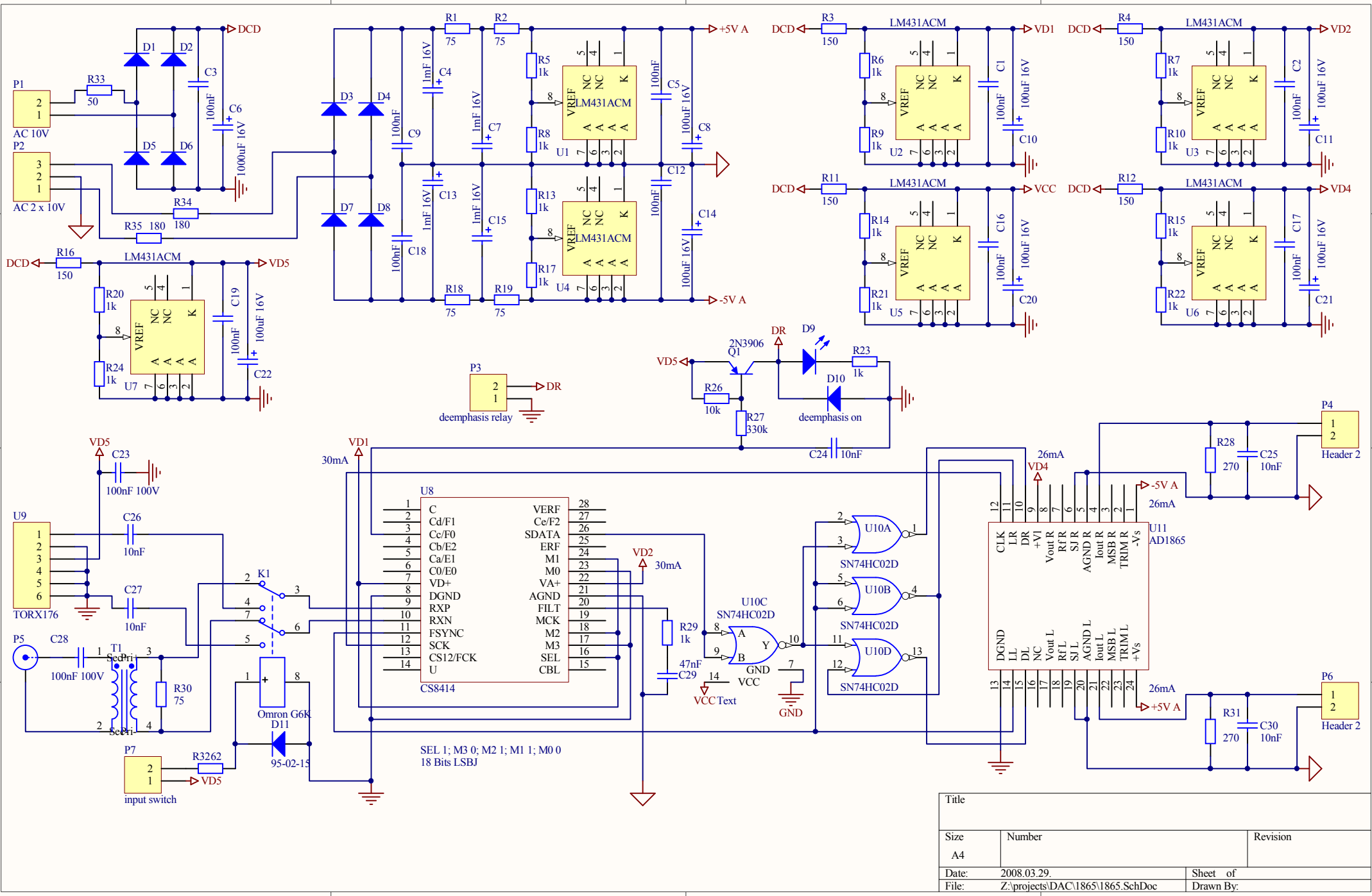

P1
AC 10V
P2
AC 2 x 10V
R33
50
R34
180
R35 180
D1
D2
D3
D4
D5
D6
D7
D8
C3
100nF
C6
1000uF 16V
DCD
R1
75
R2
75
R18
75
R19
75
C4
C7
C9
C13
C15
C18
1mF 16V
R5
1k
R8
1k
R13
1k
R17
1k
U1
U4
LM431ACM
VREF
NC
K
C5
C8
C12
C14
100nF
100uF 16V
+5V A
-5V A
R3
150
R4
150
R6
1k
R9
1k
R7
1k
R10
1k
U2
U3
C1
C10
C2
C11
VD1
VD2
R11
150
R12
150
R14
1k
R21
1k
R15
1k
R22
1k
U5
U6
C16
C20
C17
C21
VCC
VD4
R16
150
R20
1k
R24
1k
U7
C19
C22
VD5
P3
deemphasis relay
DR
2N3906
Q1
R26
10k
R27
330k
D9
D10
R23
1k
deemphasis on
C24
10nF
C23
100nF 100V
U9
TORX176
C26
10nF
C27
10nF
P5
C28
100nF 100V
T1
Sec Pri
Sec Pri
R30
75
K1
Omron G6K
D11
95-02-15
P7
input switch
R3262
VD5
VD1
30mA
U8
CS8414
C
Cd/F1
Cc/F0
Cb/E2
Ca/E1
C0/E0
VD+
DGND
RXP
RXN
FSYNC
SCK
CS12/FCK
U
VERF
Ce/F2
SDATA
ERF
M1
M0
VA+
AGND
FILT
MCK
M2
M3
SEL
CBL
VD2
30mA
R29
1k
47nF
C29
U10C
SN74HC02D
VCC Text
GND
U10A
U10B
U10D
SN74HC02D
26mA
VD4
-5V A
26mA
U11
AD1865
CLK
LR
DR
+V1
Vout R
Rf R
SJ R
AGND R
Iout R
MSB R
TRIM R
-Vs
DGND
LL
DL
NC
Vout L
Rf L
SJ L
AGND L
Iout L
MSB L
TRIM L
+Vs
26mA
+5V A
P4
Header 2
R28
270
C25
10nF
P6
Header 2
R31
270
C30
10nF
SEL 1; M3 0; M2 1; M1 1; M0 0
18 Bits LSBJ
Title
Size
A4
Number
Revision
Date: 2008.03.29.
Sheet of
File: Z:\projects\DAC\1865\1865.SchDoc
Drawn By: